MARVIN

Essential Casement

Replacement Parts

Specifications and technical data are subject to change without notice.

Numbers listed in ( ) parentheses are metric equivalents in millimeters rounded to the nearest whole number.

Suggested fasteners are not included and must be ordered separately.

Illustrations are not to scale.

Contents

Product History....2
Part Identification - Casement Operator....3
Part Identification - Casement Stationary/Picture/Transom....4
Handles....5
Operators....6
Hinges....8
Locking Hardware....9
WOCD Field Applied and Replacement Kit....10
Miscellaneous Parts....11
Tools....12
Vinyl Parts - Configured Parts in OMS....13
Weather Strip - Configured Parts in OMS....14
Weather Strip - Discontinued No Longer Available (NA)....15
Screen Replacement....16
Screen Parts....17
Screen Parts - Discontinued Limited Availability (LA)....18
Sash Replacement....19

Return to Contents

Produced	Unit Type	Features and Changes
2010	Casement	02/2010: Introduced the Essential Casement product. 12/2010: Introduced the Coastal Hardware option.
2011	Casement	03/2011: Updated Bottom Sill Cover Profile.
2012	Casement	10/29/2012: Introduced Essential expanded sizes and mulls.
2015	Casement	02/23/2015 Introduced a new drip cap with nailing fin.
2017	Casement	12/18/2017 Added availability of customer specified divided lite cut configuration for GBG. To include allowing any color GBG to the exterior only of standard and special sized units.
2018	Casement	02/2018: Introduced Bronze and Ebony interior option. Standardized Ebony exterior from Essential Ebony to Marvin Ebony. 10/29/2018: Low E3 ERS glass type was added. 12/10/2018: The screen frame profile was updated. 12/17/2018: Introduced textured glass types: Reed, Narrow Reed, Rain, Glue Chip and Frost and also colored glass types: Clear, Bronze, Gray and Green.
2020	Casement	01/2020: Protective Glass Film becomes a standard feature across all Essential product lines. 04/27/2020: Added WOCD field applied and replacement kits (see Product Bulletin 758). 08/31/2020: Added Custodial and Non−Custodial Sash Limiters.
2021	Casement	04/01/2021: The frame weather strip was updated from V189 to V3229, a continuous weather strip. 10/25/2021: Standard screen mesh changed to Marvin Bright View™, see Product Bulletin 793 for more information. Interior Frame Covers became available as Configured Parts in OMS, see Product Bulletin 798 for more information.
2022	Casement	02/28/2022: Frame and sash weather strip will now be available in Configured Parts in OMS. See Product Bulletin 822 for more information. 04/21/2022: Part numbers were removed for Vinyl profiles V1989, V2840, V1990, V1900, V2996, V1899 and V2841 and Weather Strip profiles V3229 and V147. Configured parts are available in OMS. Any Discontinued - Limited Availability (LA) will continue to be available by part number. See Product Bulletin 830 for more information. 06/27/2022: The Essential collection will transition to black weatherstrip (and associated components) for all window and door products, effective June 27th, 2022. Beige weather strip will continue to be available for warranty/service needs. See Product Bulletin 834 for more information.

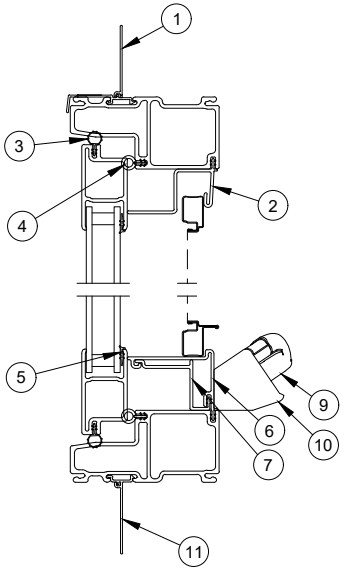

Head Jamb and Sill Detail

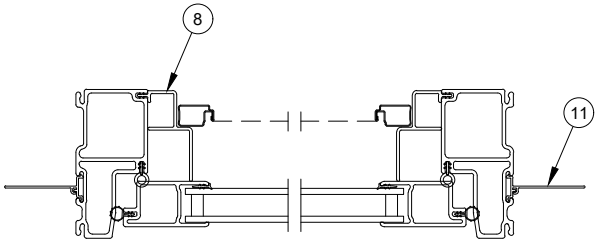

Jamb Detail

1. Head Jamb Nail Fin w/Drip Cap, V2395 (see Accessories section)
2. Frame Cover Head Jamb, V1899/V2841
3. Sash Weather Strip, V147
4. Frame Weather Strip, V3229
5. Glazing Boot, Sash, V1415 (see Accessories section)
6. Frame Cover, Sill, Top, V1989/V2840
7. Frame Cover, Sill, Bottom, V1990
8. Frame Cover, Jamb, V1900/V2996
9. Roto Gear Folding Handle
10. Roto Gear Assembly
11. Sill and Jamb Nail Fin, V1428 (see Accessories section)

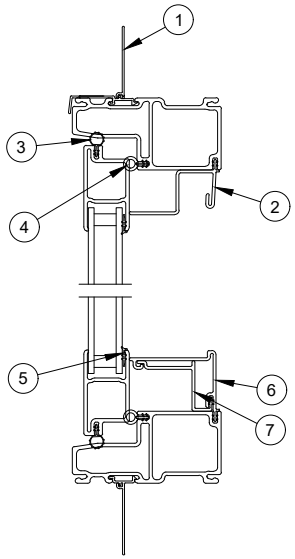

Head Jamb and Sill Detail

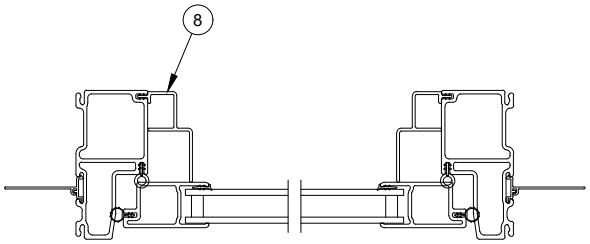

Jamb Detail

1. Head Jamb Nail Fin with Drip Cap, V2395 (see Accessories section)
2. Frame Cover, Head Jamb, V1899/V2841
3. Sash Weather Strip, V147
4. Frame Weather Strip, V3229
5. Glazing Boot, Sash, V1415 (see Accessories section)
6. Frame Cover, Sill, Top, V1989/V2840
7. Frame Cover, Sill, Bottom, V1990
8. Frame Cover, Jamb, V1900/V2996

Return to Contents

Folding Handle/Cover

Dyad - Used on CN16 and CN20 and custom sizes < 28”
Dual Arm - Used on CN26-CN30 and custom sizes >= 28”

Color	RH Dyad PN	LH Dyad PN
	LH Dual PN	RH Dual PN
Almond Frost	10896251	10896250
White	10896254	10896253
Oil Rubbed Bronze	10896306	10896303
Satin Nickel	10896305	10896302
Brass	10896304	10896301
Matte Black	10896318	10896319

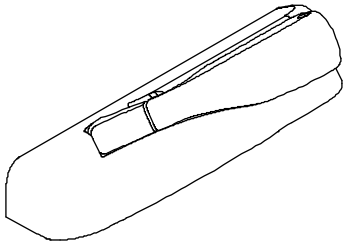

Dyad Operator Roto Gear

Includes:

4 – #8x7/8", PH, Flat, AB, ZYC

Usage	Color	LH PN	RH PN
Used on CN16, CN20 and R.O. < 28.00" (frame size < 27.50")	EGard	10896279	10896280
	Coastal	11862610	11862611

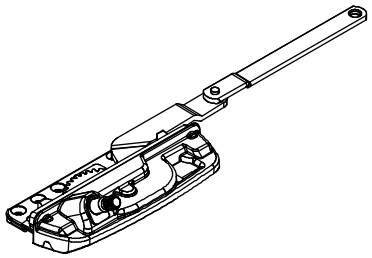

LH shown

Dual Arm Operator Roto Gear

Includes:

4 – #8x7/8", PH, Flat, AB, ZYC

Usage	Color	LH PN	RH PN
Used on CN26, CN30 and R.O. >= 28.00" (frame size >= 27.50")	EGard	10896281	10896282
	Coastal	11862605	11862606

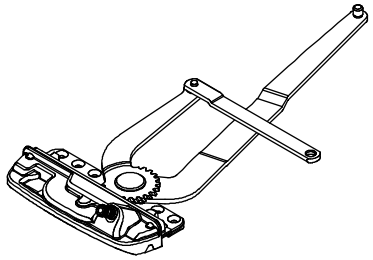

RH shown

Roto Gear Undercover

NOTE: Optional usage to match roto gear cover and handle color in elevated window applications. Used on the underside of the roto gear.

Color	PN
Almond Frost	10880185
White	10880184
Oil Rubbed Bronze	10880188
Satin Nickel	10880186
Brass	10880187
Matte Black	10880189

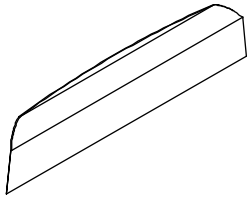

Stud Bracket

Includes:

3 – #8-15 x 7/8", Type 17 w/#7 head (E–Gard Steel w/ZYC or Stainless Steel)

Handing	PN	Coastal PN
RH	10896263	11862608
LH	10896264	11862609

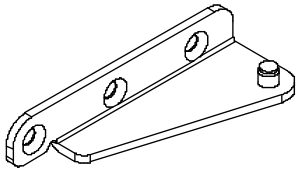

RH shown

Guide Track

Includes:

3 - #8-15 x 7/8", Type 17 w/#7 head (E–Gard Steel w/ZYC or Stainless Steel)

E-Gard PN	Coastal PN
10896276	11862607

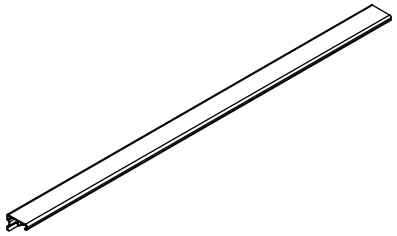

Guide Track Shoe

PN
10896277

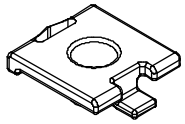

Custodial Sash Limiter, 3" Travel

Includes:

1 – Sash limiter track
2 – #8 X 3/8" T20 Torx screw
2 – 5/32" diameter x 5/16" peel rivet
1 – T20 Torx tamperproof bit
1 – Field installation instructions

NOTE: Units must have a frame width of 23" or greater. 2 sash limiters are required for frame height 60" and greater.

Usage dates:

08/31/2020 to present

PN
11850763

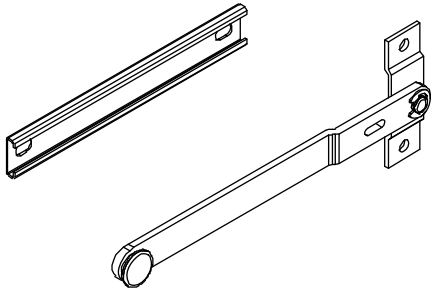

Non-Custodial Sash Limiter, 3" Travel

Includes:

1 – Sash limiter arm assembly (non–custodial)
1 – Sash limiter track
2 – #8 X 3/8" T20 Torx screw
2 – 5/32" diameter x 5/16" peel rivet
1 – T20 Torx tamperproof bit
1 – Field installation instructions

NOTE: Units must have a frame width of 23" or greater. 2 sash limiters are required for frame height 60 "and greater.

Usage dates:

08/31/2020 to present

PN
11850764

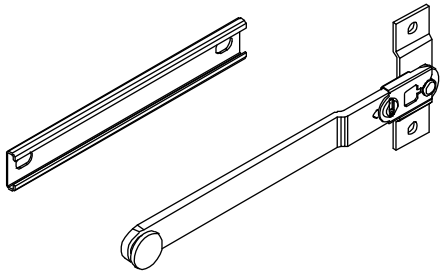

Return to Contents

Hinge Arm Assembly

Includes:

4 - #8-15 x 7/8", Type 17 w/#7 head (E–Gard Steel w/ZYC or Stainless Steel)

Operation	PN	Coastal PN
UL–LR	10814755	11862624
LL–UR	10814754	11862623

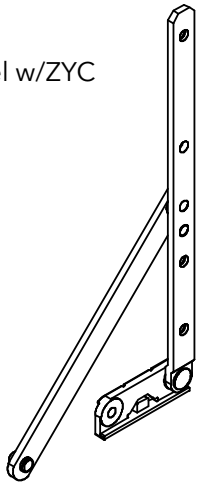

Adjustable Hinge Track

Color	Operation	PN
Stainless Steel	UL–LR	10896284
	LL–UR	10896283

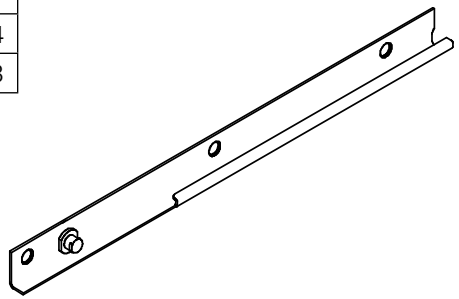

Casement Hinge Lift

PN
11862631

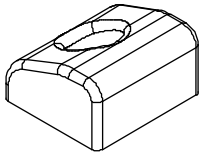

Hinge Limiter

Color	LH PN	RH PN
Stainless Steel	11862602	11862601

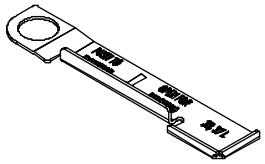

Return to Contents

Lock Drive Assembly

Includes:

2 – 1/8” (3) X 19/32” (15) peel rivets

PN
11881083

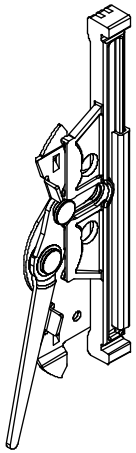

Lock Drive Handle and Escutcheon

Color	PN
Almond Frost	10895019
White	10895018
Oil Rubbed Bronze	10895020
Satin Nickel	10895021
Brass	10895022
Matte Black	10895023

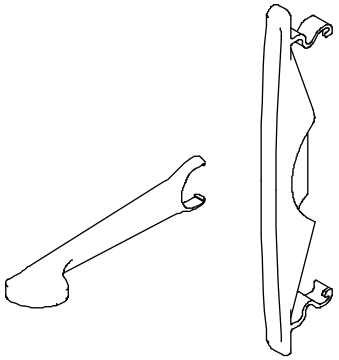

Tie Bar Assembly

Includes:

2, 4 or 6 – 1/8” (3) X 19/32” (15) 5056 aluminum peel rivets

Size	PN	Coastal PN
CN 20, CN26	10896255	11862615
CN 30, CN36	10896256	11862616
CN 40, CN46	10896257	11862617
CN 50	10896258	11862618
CN 56	10896259	11862619
CN 60	10896260	11862620

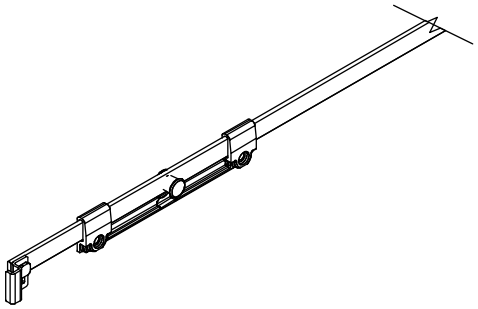

Keeper

Color	LH PN	RH PN
E -Gard	10896266	10896267
Black 300 Series	11862914	11862913
Coastal	11862614	11862613

Suggested Fasteners	
2 - #8-15 x 7/8”, Type 17 w/#7 head (E–Gard Steel w/ZYC or Stainless Steel)	
E-Gard	11802101
Black	11802102
Stainless Steel (Coastal)	11802103

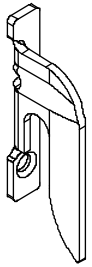

RH shown

Keeper Shim

Usages dates:

11/2019 to present

Color	PN
White	10500617
Black	10500618

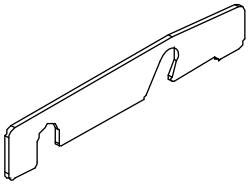

Return to Contents

WOCD Field Applied and Replacement Kit

Includes:

1 – Field installation instructions
1 – Hang tag
2 – Safety and operating instructions
1 – WOCD sticker
1 – Casement WOCD tether assembly
1 – Casement WOCD locking assembly
2 – #8–15 x 1 1/2” flat head screw
2 – #8–18 x 3/4” Torx T20screw, AB

NOTE: All covers for units must be ordered separately.

Color	PN
Matte Black	11902901
Stone White	11902902
Almond Frost	11902903
Oil Rubbed Bronze	11902904

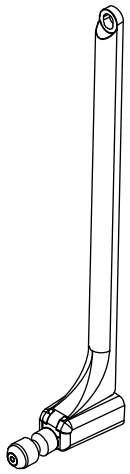

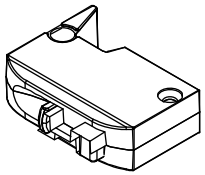

NOTE: For windows without factory-applied WOCD, refer to Product Bulletin 758 for more information.

Sash Snubber

Includes:

2 - 5/32” x 9/16” peel rivets

PN
11881081

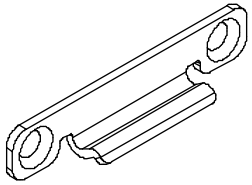

Concealed Snubber, Frame

Includes:

2 - 5/32” x 9/16” peel rivets

PN
11881082

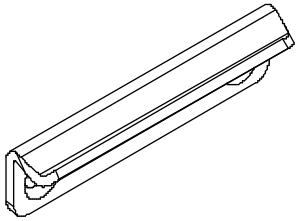

Stationary Bracket

Includes:

2 - 5/32” x 9/16” peel rivets

PN
11881080

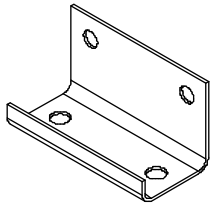

3/8” Open Ended Wrench

PN
10814840

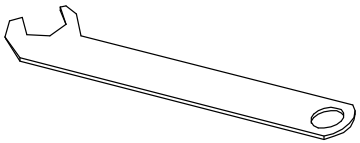

T20 Torx Tamperproof Bit

Usage dates:

08/31/2020 to present

PN
02071481

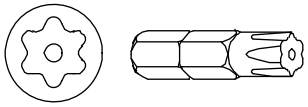

Ordering specifications for Configured Parts in OMS:

1. Unit type;
2. Unit handing;
3. Interior and exterior color;
4. Application type: Full frame or Insert;
5. Unit size (call number, rough opening or frame size);
6. Location of cover (from exterior view);
   a. Top,
   b. Sill,
   c. Left jamb,
   d. Right jamb.
7. Prep for through jamb;
8. Prep for WOCD.

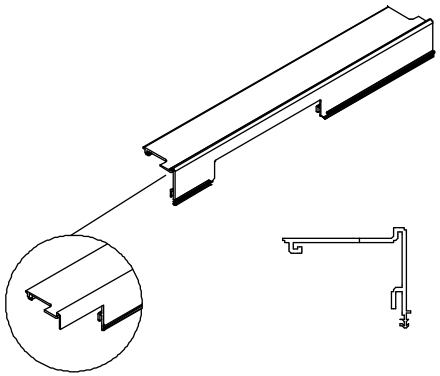

V1989/V2840
Example: Frame Cover Sill Top, Operator
(Inset shows WOCD Secondary Sill Cover)

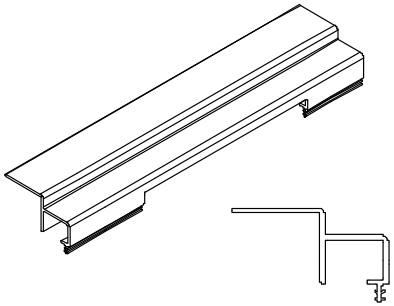

V1990/V2996
Frame Cover Jamb, Lock Side

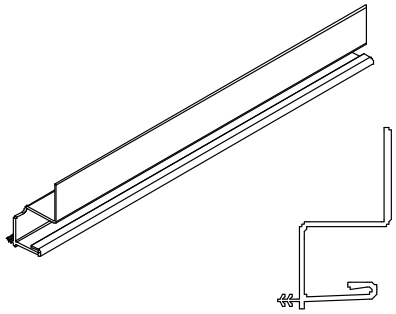

V1899/V2841
Head Jamb Frame Cover

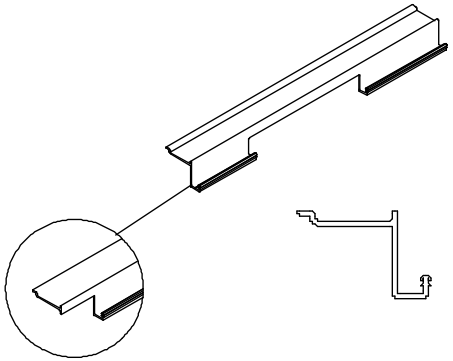

V1990
Example: Frame Cover Sill Bottom, Operator
(Inset shows WOCD Secondary Sill Cover)

Return to Contents

Ordering specifications for Configured Parts in OMS:

1. Unit type;
2. handing;
3. exterior color;
4. unit size (width and height);
5. component location (for sash weather strip only).

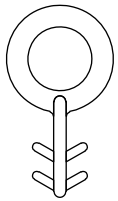

V3229
Frame Weather Strip

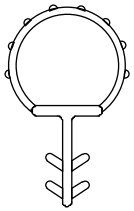

V147
Sash Weather Strip

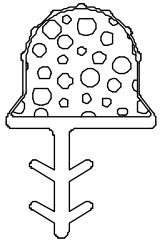

V189, Frame Weather Strip

No longer available, replace with V3229

Screen Replacement

To order, specify:

1. Size; Measure the existing screen OM, if not available, determine the size of the screen by using the conversion chart below shown below.
2. Color options: Stone White exterior/interior, Bronze exterior/interior, Ebony exterior/interior (split finishes not available).

Screen sizes for Casement Manufactured 2010 to Present

Daylight Opening to OM of sash

Daylight opening is the measurement of the visible glass. Daylight Width + 1 13/32”(36)= OM Width of Screen
Daylight Height + 1 1/64” (26) = OM Height of Screen

NOTE: OM of aluminum screen includes corner keys.

NOTE: Screens feature leaf spring mounting system.

Standard screens offer almond frost aluminum surround. Standard screen mesh is Marvin Bright View™. Determine the outside measurement (OM) of the existing screen. Find the sizes that correspond to the width and height indicated on the following chart.

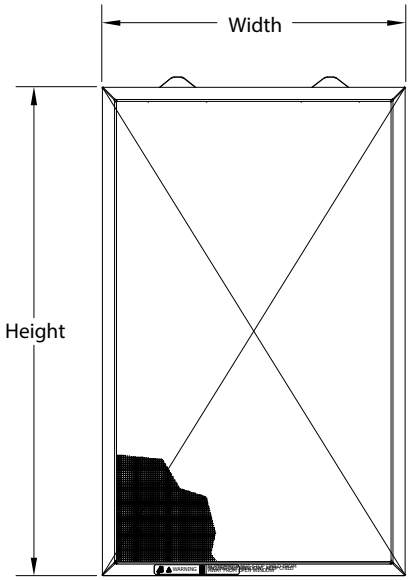

CN Size	OM Width	CN Size	OM Height
CN16	13 15/64” (336)	CN20	18 53/64”(478)
CN20	19 15/64” (489)	CN26	24 53/64” (631)
CN26	25 15/64” (641)	CN30	30 53/64” (783)
CN30	31 15/64” (793)	CN36	36 53/64” (936)
CN36	37 15/64” (946)	CN40	42 53/64” (1088)
CN40	43 15/64” (1098)	CN46	48 53/64” (1240)
		CN50	54 53/64” (1393)
		CN56	60 53/64” (1545)
		CN60	66 53/64” (1698)

Leaf Spring

Usage dates:

12/10/2018 to present

Color	PN
Stainless Steel	313430

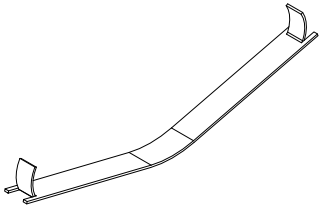

Leaf Spring

Usage dates:

02/2010 to 12/09/2018

Color	PN
Stainless Steel	11868835

To order, specify:

1. Size (using chart below);
2. Operating, stationary, transom or picture, left or right operator (if applicable);
3. Exterior color;
4. Interior Colors: Stone White, Bronze with Bronze exterior, Ebony with Ebony exterior (Split finishes not available for Dark interior option.)
5. glazing.

Sash sizes for Casement Manufactured 2010 to Present

Daylight Opening to OM of sash

Daylight Width + 3 17/32” = OM Width of Sash
Daylight Height + 3 17/32” = OM Height of Sash

NOTE: Casement sash is not reglazable. Replacement sash will include all hardware.

CN Size	OM Width	CN Size	OM Height
CN16	15 17/32” (420)	CN10	9 17/32” (267)
CN20	21 17/32” (521)	CN16	15 17/32” (420)
CN26	27 17/32” (674)	CN20	21 17/32” (521)
CN30	33 17/32” (775)	CN26	27 17/32” (674)
CN36	39 17/32” (928)	CN30	33 17/32” (775)
CN40	45 17/32” (1029)	CN36	39 17/32” (928)
CN50	57 17/32” (1283)	CN40	45 17/32” (1029)
CN60	69 17/32” (1537)	CN46	51 17/32” (1182)
		CN50	57 17/32” (1283)
		CN56	63 17/32” (1436)
		CN60	69 17/32” (1537)

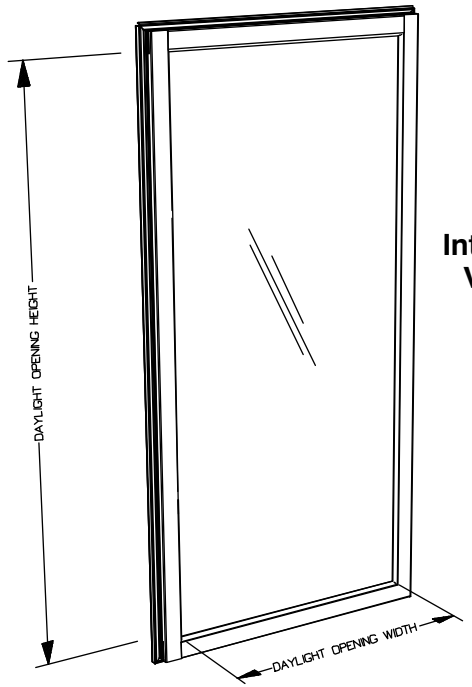

Interior View

Casement

NOTE: The daylight opening is the interior measurement of visible glass.