Modern Casement and Awning

Installation and Mulling for New Construction

ABSTRACT: Please read these instructions in their entirety before beginning to install your Marvin Modern Casement product. These installation instructions demonstrate the installation of a Marvin window in new wood frame construction using an industry approved water management system. For installation using other construction methods, such as remodeling, replacement, and recessed openings refer to the latest version of ASTM E2112, "Standard Practice for Installation of Exterior Windows, Doors and Skylights", for installation suggestions. The same information for ASTM E2112 can be found on the ASTM website, www.astm.org.

Regional standard practices, environmental conditions, and codes may vary and supersede the procedures contained within. The responsibility for compliance is yours: the installer, inspector, and owner(s).

The English language version of this instruction is the official version and shall take precedence over any translation.

These instructions are relevant for the following Casement product types:

- Casement Crank-out
- Casement Push-out
- Casement Picture
- Awning Crank-out
- Awning Push-out

Table of Contents

Hazards and Warnings 3
What is Included in the Job Box 3
Installer and Builder Information 4
After Market Products 4
Materials Needed 4
Tools Recommended 4
Preparing the Opening 5
Rough and Masonry Opening Requirements 5
Installing the Window 8
Preparing the Window 8
Level, Plumb, and Square 9
Additional Fastening Details for Casement and Awning 14
Adjusting the Sash 15
Install the Frame Cover Supports 16
Installing Interior Frame Covers 17
Installing the Crank Handle 19
Exterior Sealing and Flashing Details 20
Flashing Modern Window Installations 20
Insulating and Sealing the Installation 23
Casement and Direct Glaze Mulling 25
Additional Fastening for Some Horizontal Mulls 29
Removing Casement Sash 30
Removing Awning Sash 32
Installing the Casement Screen 33
Installing the Pushout Screen 34

Hazards and Warnings

NOTE: Numbers listed in parentheses () are metric equivalents in millimeters rounded to the nearest whole number.

⚠WARNING!

Do NOT lift or move without proper equipment.
Read, understand, and follow all lift equipment manufacturers' instructions and safety information.

⚠WARNING!

This product can expose you to chemicals including titanium oxide, which is known to the state of California to cause cancer. For more information, go to www.P65Warnings.ca.gov.

⚠WARNING!

Older homes may contain lead-based paint, which may be disturbed when replacing windows or performing renovations. Consult state or local authorities for safe handling, disposal, or abatement requirements. For information, go to www.epa.gov/lead.

NOTE: Please consult with local waste management authorities regarding proper disposal and/or recycling of all waste materials generated during installation, including any product being replaced, packaging materials, and other waste.

⚠WARNING!

This product can expose you to chemicals including methanol, which is known to the state of California to cause birth defects or other reproductive harm. For more information, go to www.P65Warnings.ca.gov.

⚠WARNING!

Always practice safety! Wear the appropriate eye, ear, and hand protection, especially when working with power tools.

CAUTION!

Wear gloves and protective clothing when handling the frame components. Some high-density fiberglass surfaces are not coated and can leave splinters in bare skin.

What is Included in the Job Box

Refer to the content list included in your job box for specific items that are included with your order. Sealants, hardware, fasteners, and many installation related parts are included with the window. See Materials Needed on page 4 for other items you will need to successfully install your Modern Casement and Awning window.

Installer and Builder Information

- Always provide a copy of these instructions for the current homeowner.
- Plan sizing of rough opening and clearance from exterior finishing systems to allow for normal materials shrinkage or shifting (e.g. wood structure with brick veneer; allow adequate clearance at the sill). Failure to do so can void the Marvin warranty coverage.
- Refer to the Technical Installation Specifications section for technical specifications regarding the installation of this product. These installation requirements as well as the details in the section must be followed to achieve the advertised Performance Grade (PG) rating of this product.
- It is the responsibility of the builder, installer, and subcontractors to protect the interior and exterior of windows or doors from contact with harsh chemical washes, construction material contamination and moisture. Damage to glazing, hardware, weather strip and cladding/wood can occur. Protect with painters tape and/or protective sheathing as required. Follow all guidelines regarding material use, preparation, personal safety and disposal.
- Contact your Marvin supplier if you have any questions regarding product and materials used in manufacturing or questions on replacement parts.
- Please refer to the PDF version of this instruction for further information regarding best practices installer and builder information, code, and other legal requirements. The PDF version is the official document of record.

After Market Products

Alterations to Marvin products including window films, insulating or reflective interior window treatments or additional glazings can cause excessive heat buildup and/or condensation. They may lead to premature failures not covered under warranty by Marvin Windows and Doors.

Before purchasing or applying any product that may affect the installation or performance of Marvin windows or doors, contact the manufacturer of after-market product/glazings that are not supplied by Marvin and request written product use, associated warranties and damage coverage. Provide this information and warranties to the end user and/or building owner for future reference.

Materials Needed

You will need to provide the following items to successfully install your Marvin Modern Casement window.

- Drip Cap
- Flashing materials
- Backing material (foam backer rod)
- Shims (composite recommended)
- Perimeter sealant
- Insulation and/or low expansion foam insulation

Tools Recommended

- Tape Measure
- Speed square
- Power drill/driver
- Phillips and Torx® T20 and T25 bits
- Level/laser level
- Flat head screwdriver

Preparing the Opening

Rough and Masonry Opening Requirements

1. Rough opening (RO) width may be up to 1 1/2" (38) wider (3/4" on each side) than the outside measurement (OM) of the frame. The RO height may be up to 1 1/2" taller than the OM of the frame. See Figure 1.

IMPORTANT

Rough openings are tested and certified at 3/4" on each side, the sill, and at the head jamb. Marvin Order Management System (OMS) will add 1 1/2" to the frame width ***but only*** 3/4" to the frame height when calculating the rough opening.

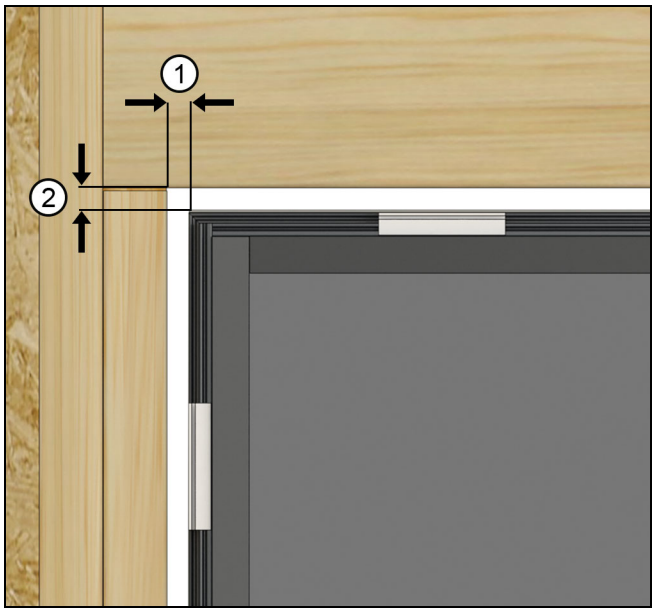

Figure 1 RO Width and Height clearance

1	RO Width (3/4" on each side)
2	RO Height (3/4" taller than OM of frame)

Brick Bind

On standard wood frame construction with brick veneer, make sure there is at least 1/2" (13) between the bottom of the window sill (or eventual placement of the window) and the top row of brick to avoid "brick bind". See Figure 2.

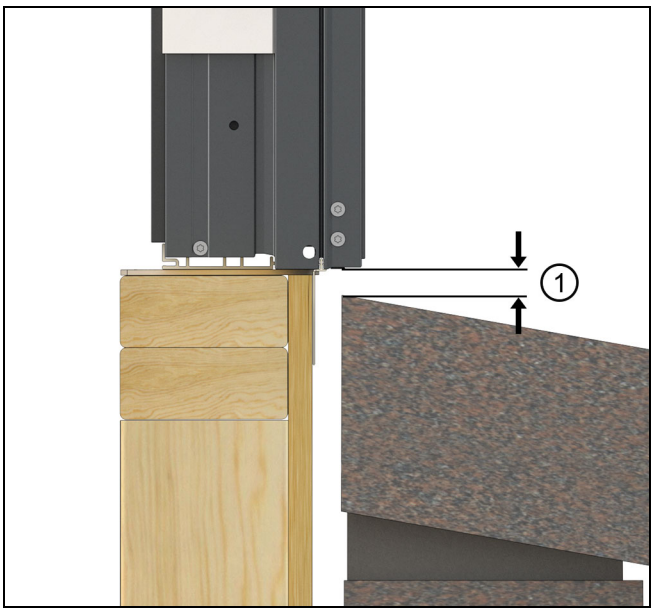

Figure 2 Avoid brick bind, maintain 1/2" gap

1	1/2" (13)

Cutting the Weather Resistive Barrier (WRB) and Pan Flashing

NOTE: This does not apply to self-adhering WRB sheathing systems.

1. Make horizontal cuts to the Weather Resistive Barrier (WRB) across the top and bottom of the Rough Opening. Make a vertical cut down the center of the RO. then make 45 degree cuts away from the corners of the top of the RO. See Figure 3.

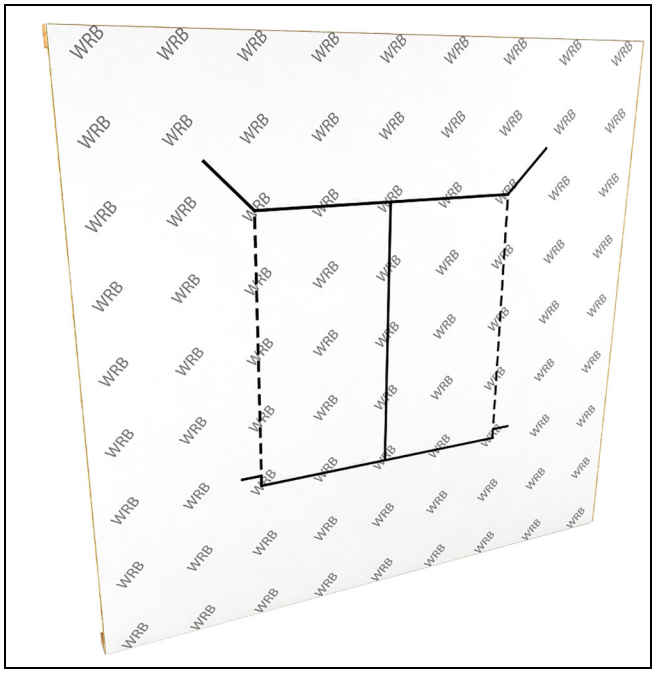

Figure 3

2. Trim up from the bottom corners about 2" (51) and then make an additional horizontal cut about 3 1/2" (89) wide. See Figure 4.

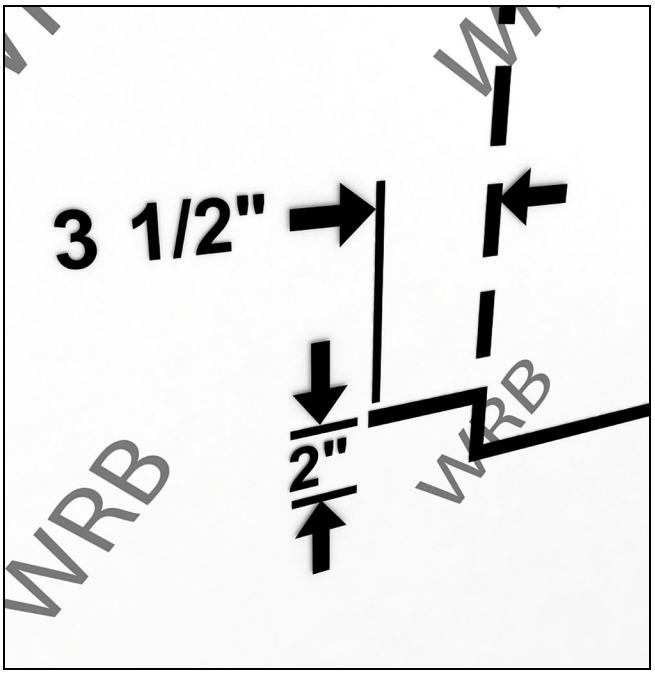

Figure 4

3. Flip the top up and side flaps away and tack temporarily. See Figure 5.

Figure 5

4. Optional: Add a continuous "Sill Wedge" out of cedar siding or similar water resistant material to create a positive drainage slope. Glue it to the RO sill with two beads of adhesive and screw in place. See Figure 6.

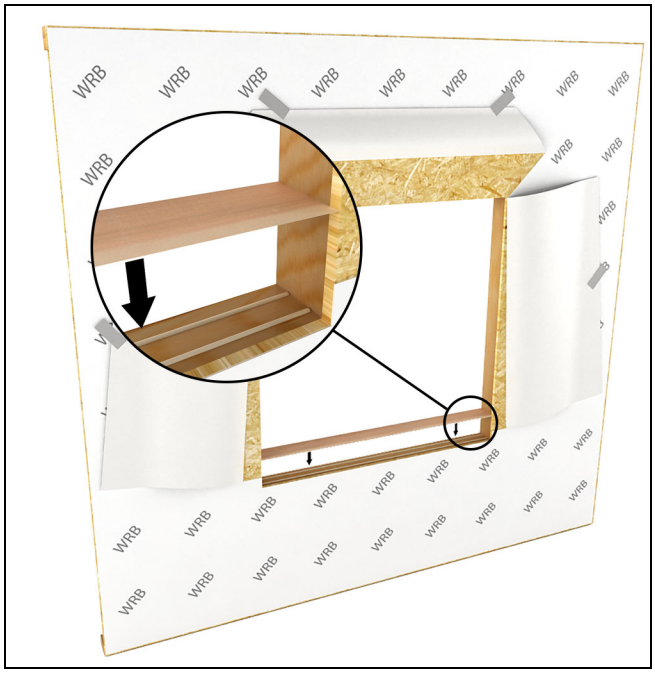

Figure 6

NOTE: This will affect your RO height, plan accordingly.

5. TYPE III Sill Pan Flash: Apply self sealing flexible membrane slope. See Figure 7.

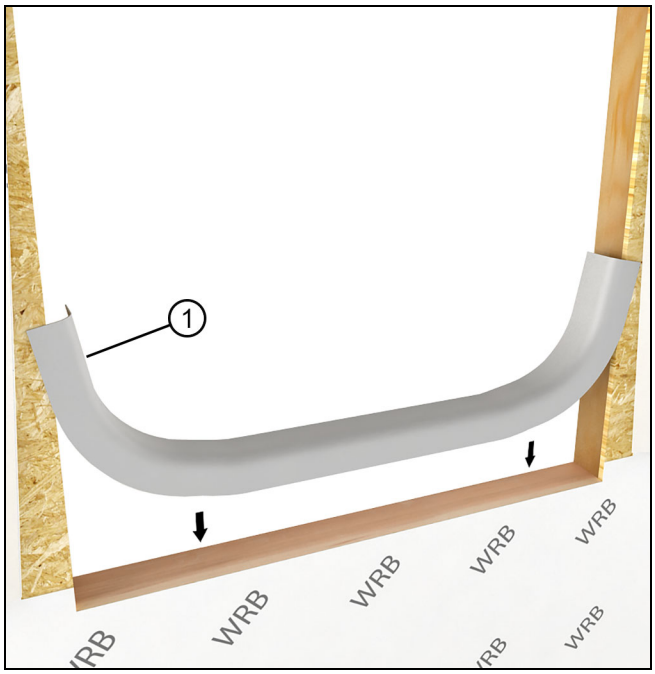

Figure 7

1	Flexible flashing membrane

NOTE: Some situations call for an upturned leg at the interior. If that is the case, do so using the excess sill flashing membrane to the interior.

6. Wrap side flaps to the interior and staple in place about 1 1/2" (38) from the interior edge of the opening. Cut the excess off near the staple so that a 1" -1 1/2" (25-38) strip of bare wood is exposed. Tape this edge with seam seal tape. See Figure 8.

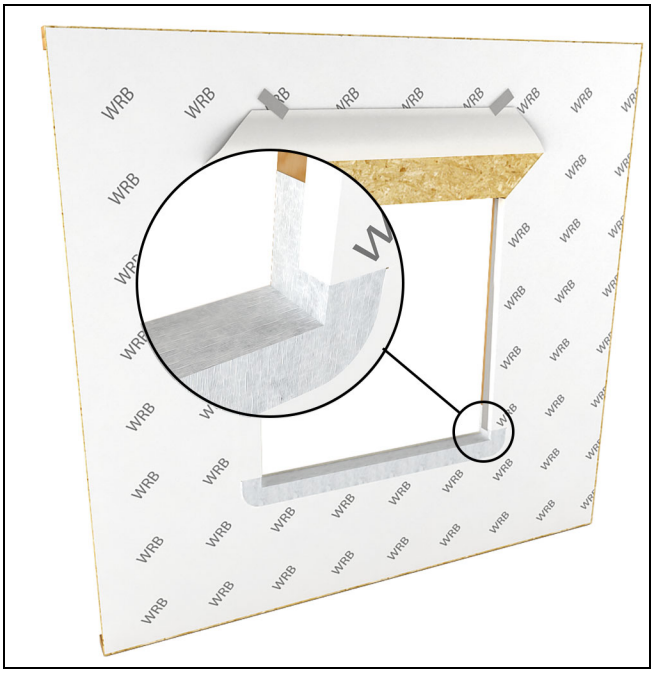

Figure 8

7. Apply seam seal tape over the corners. Place plastic or composite shims at the ends and in the middle of the RO to counter the slope of the sill wedge and support the unit. Fasten with adhesive or finish nails. If using finish nails, place adhesive under shim where the nail will penetrate. See Figure 9.

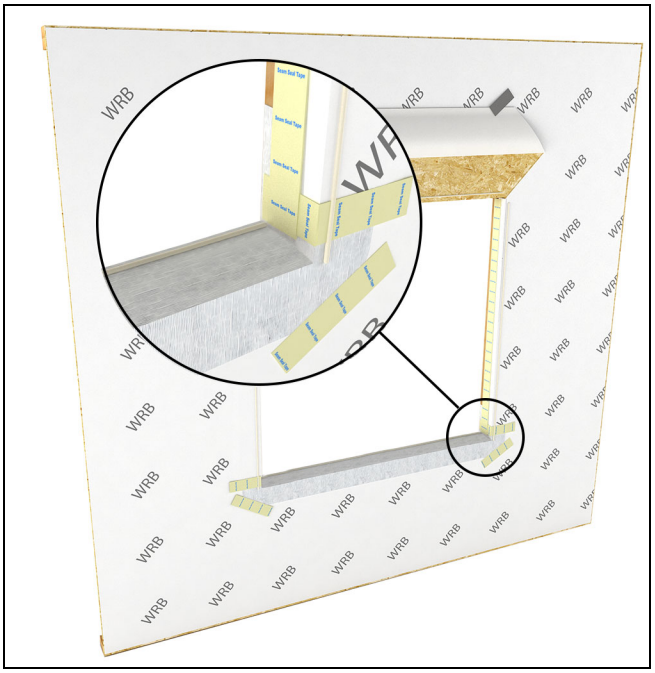

Figure 9

Installing the Window

⚠ WARNING!

Do NOT lift or move without proper equipment.
Read, understand, and follow all lift equipment manufacturers' instructions and safety information.

Seek Assistance

Some large windows and/or assemblies are very heavy. Avoid injury by getting help to lift and position the window into the rough opening.

Preparing the Window

1. Remove any packaging and pull the operator shipping cover with a pliers. Dispose of packaging properly.

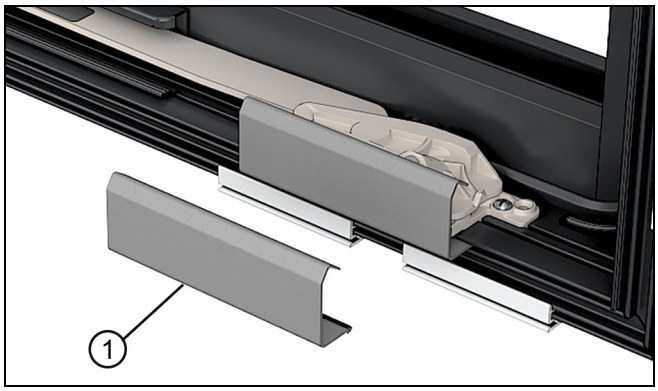

Figure 10

1	Operator shipping cover

2. Make sure the shim blocks are centered on the installation hole.

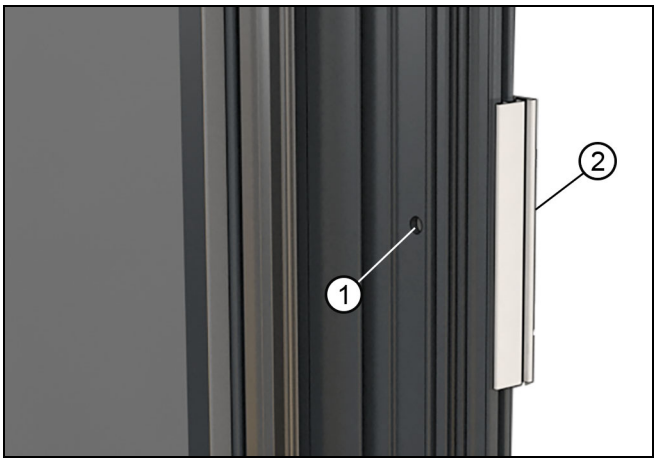

Figure 11

1	Installation hole
2	Shim block

NOTE: Nail fin is used for positioning only. It is not required that you fasten the nail fin to the wall. Through jamb installation is required using fasteners provided. Shim blocks are required at every installation hole to provide a flat spot for shimming. ***Do not remove the shim blocks.***

Level, Plumb, and Square

1. Check the sill for level and adjust if necessary. See Figure 12.

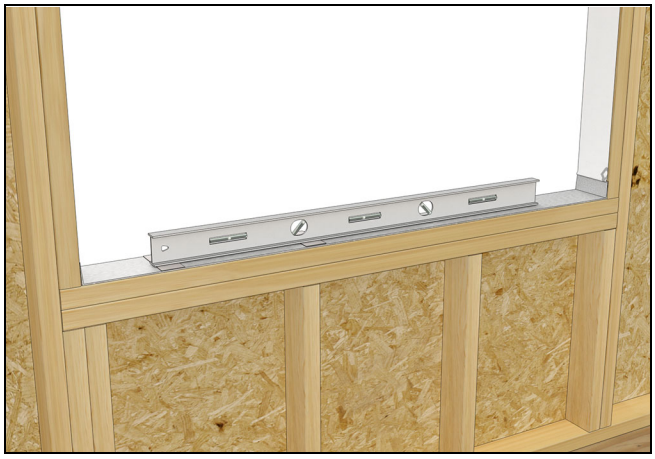

Figure 12

IMPORTANT

When using drywall return (or equivalent) at the sill greater than 1/2" thickness, you will need to shim beneath the sill to avoid interference with interior covers.

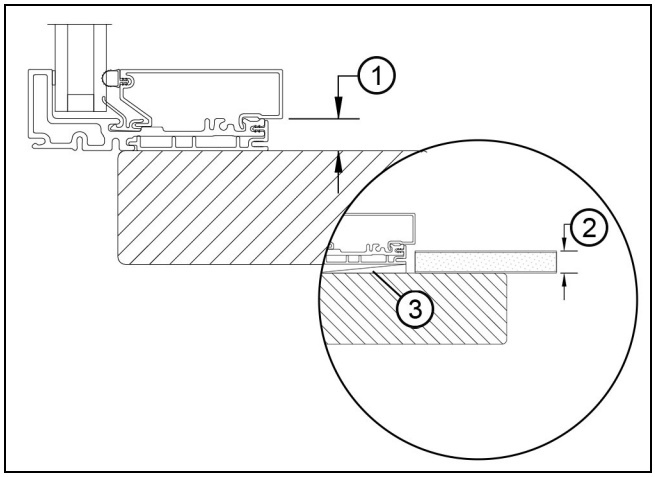

Figure 13

1	9/16" (14) gap between RO and cover (unshimmed)
2	5/8" (16) drywall and shimmed window
3	Shims

2. Make sure the shim blocks are centered on the installation hole.

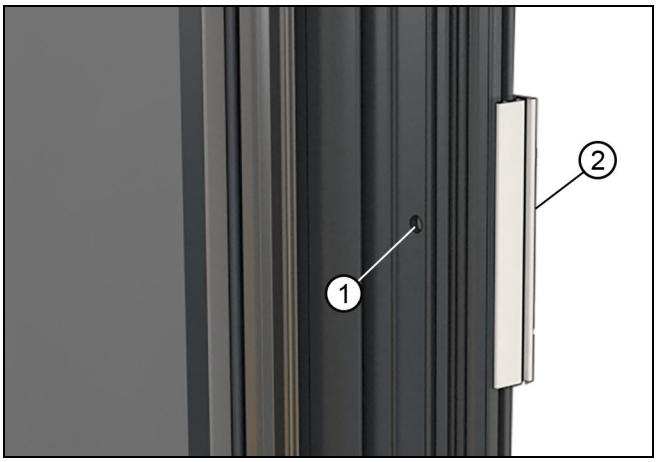

Figure 14

1	Installation hole
2	Shim block

3. Center the window in the opening. See Figure 15.

Figure 15

4. Tack the nailing fin on the top outside corners. See Figure 16.

Figure 16

5. Insert a backer rod between the frame and rough opening until it contacts the back side of the nail fin (or even with the exterior sheathing. See Figure 17.

Figure 17

6. Before installing installation screws be sure to pre-drill into the rough opening with a long 1/8" drill bit.

Figure 18

7. Shim and fasten at the bottom corners.See Figure 19 and Figure 20.

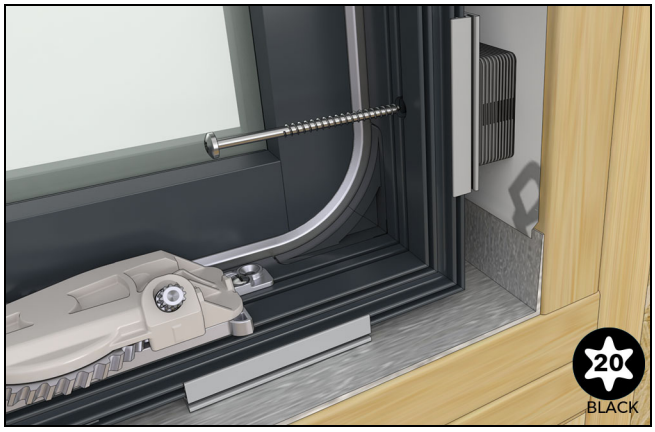

Figure 19

Figure 20

8. Plumb the unit so the frame is on the same plane (inside/out).See Figure 21.

Figure 21

9. Shim and tack one of the top corners with an installation screw. See Figure 22.

Figure 22

10. Check for square by measuring diagonals. See Figure 23.

Figure 23

11. Adjust shims if necessary and fasten the opposite top corner. See Figure 24.

Figure 24

12. Measure at the top and bottom. The measurements should be equal. Measure at the center and adjust shims/screws until they are equal to the top and bottom. See Figure 25.

Figure 25

13. Complete the fastening at all the pre-drilled holes in the jamb, head jamb and sill. See Figure 26.

Figure 26

IMPORTANT

If you are mulling windows proceed to Casement and Direct Glaze Mulling on page 25.

Additional Fastening Details for Casement and Awning

IMPORTANT

When fastening into the rough opening sill, inject sealant into the holes prior to driving the fasteners. See Figure 27.

Figure 27 inject installation holes with sealant prior to fastening.

1. Crank open the sash and drive a screw into the hole in the base that is hidden under the crank arm. See Figure 28.

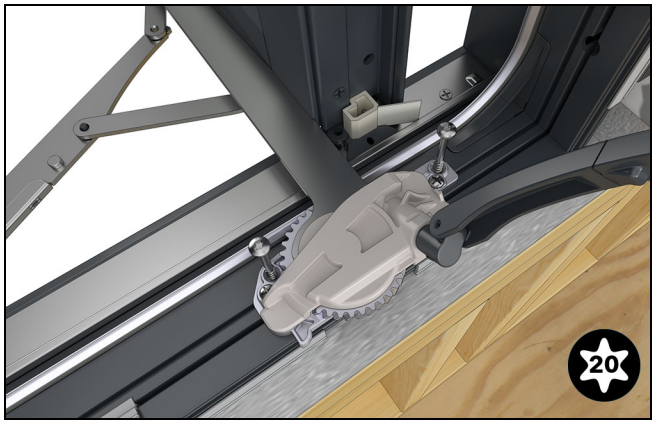

Figure 28

IMPORTANT

Do not use the 3" screws when mulled above another window. A 1 3/8" screw is installed at the factory when a field prepped window has the mull pin attached to the sill. In some cases you may need to install this screw in the field, refer to Additional Fastening for Some Horizontal Mulls on page 29.

2. With the sash open, remove the shipping blocks from the edges of the sash.See Figure 29.

Figure 29 Shipping blocks are located at each corner.

Adjusting the Sash

At times you may need to adjust the sash hinges to obtain an even reveal between the sash and the frame. The cam found on the *sash track stud* provides minimal adjustment and is not intended to remedy a severely out of square frame installation.

1. To adjust the hinge without detaching the support arms use the adjustment wrench to move the cam up to 45 degrees left or right. Make small adjustments at the top and bottom to obtain an even reveal. See Figure 30.

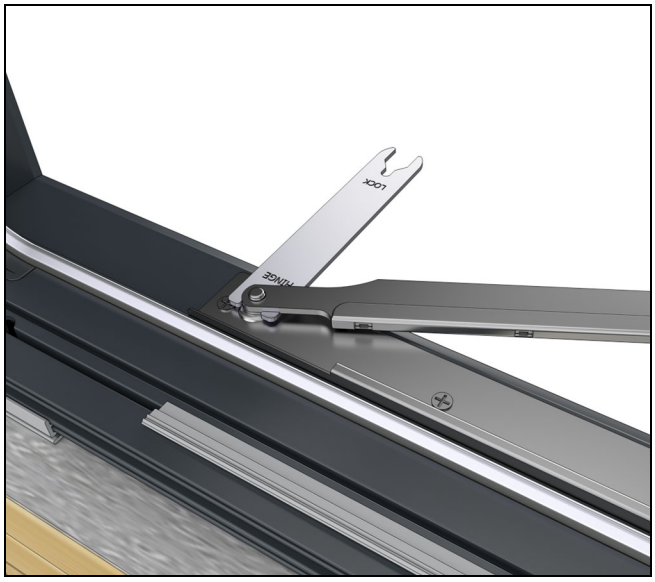

Figure 30

NOTE: A general rule of thumb is that the sash will move in the direction of the back of the wrench. In the illustration below as you move the wrench away from the sill track, the sash will move to the left (as seen from the interior) and vice versa.

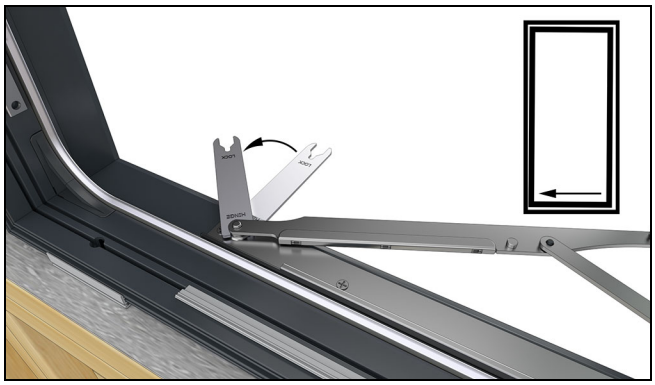

Figure 31

Install the Frame Cover Supports

Install frame cover supports on the jambs at all four corners of the window. The supports help to hold the jamb covers straight so they will line up with the head jamb and sill cover. After the window is installed the supports should fit tight to the head jamb and sill at all four corners.

IMPORTANT

Any awning unit with an **around the corner locking device** will not allow the use of supports at that corner.

1. Push the vinyl cover support into the jamb kerf as shown at the top and bottoms of both jambs.

Figure 32

2. Once the frame cover supports are seated properly, install the jamb, head jamb, and sill covers sequentially.

3. If there is a gap between the jamb covers and the head jamb or sill covers, a shim pushed between the frame cover support and the jamb covers as shown below will eliminate the gap. The shims can be a permanent part of the installation to keep the cover gaps tight.

IMPORTANT

The shim must not interfere with closing of the sash.

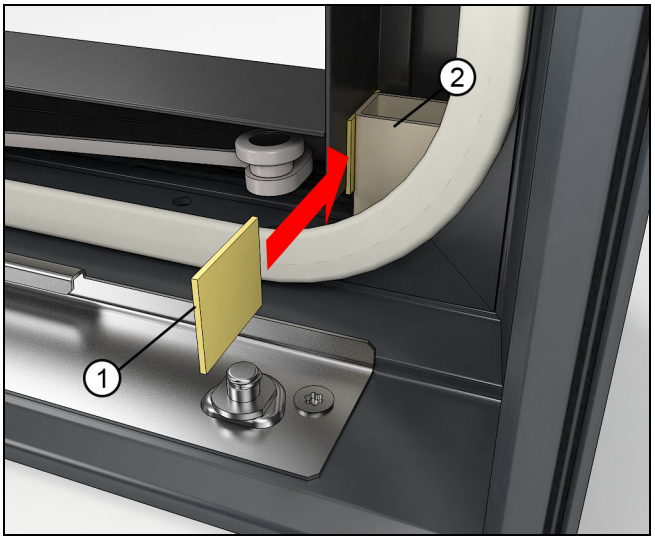

Figure 33

1	Shim
2	Cover support

Installing Interior Frame Covers

NOTE: Covers are sent with fabricated cut ends.

1. Install the jamb covers first. The connecting barb fits into the frame. Push the cover straight on. See Figure 34.

Figure 34

1	Jamb cover

2. Install the head jamb cover next. Start the cover a little higher than its final resting position to avoid scratching the jamb covers, then push it straight on. See Figure 35.

Figure 35

1	Head jamb cover

3. Install the sill cover last. Rotate the cover around the crank operator, then push it straight on. Avoid scratching the jamb covers. See Figure 36.

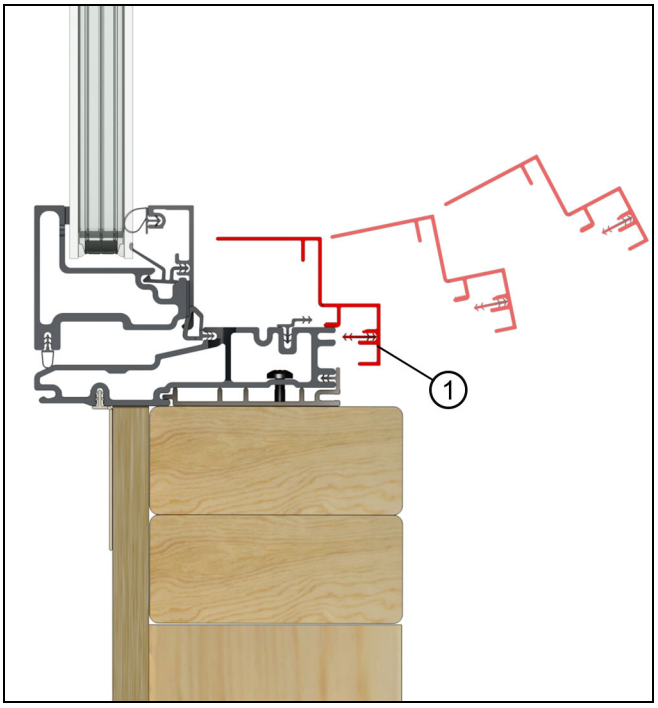

Figure 36

4. Install the crank hardware cover. Snap the cover on the base of the hardware. See Figure 37.

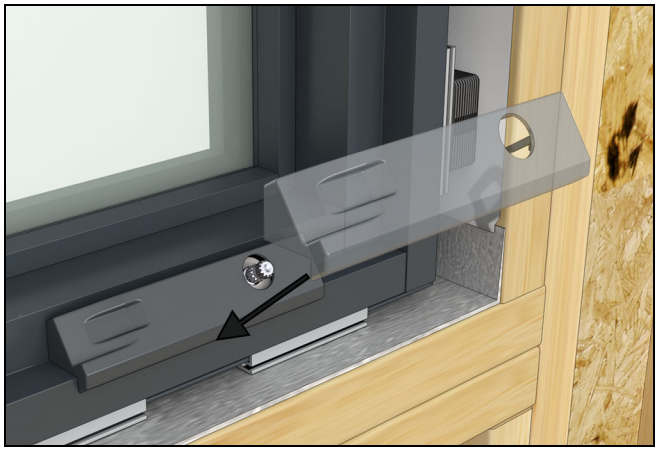

Figure 37

5. Insert the lock handle cover into the locking jamb cover recess.See Figure 38.

Figure 38

6. Insert the forked end of the lock handle to fit around the lever on the lock. Push the handle in until you feel it snap into place. See Figure 39.

Figure 39

IMPORTANT

Do not install drywall over the interior frame cover. This will hinder the ability to remove the cover later. When applying sealant between the cover and drywall, use a paintable caulk.

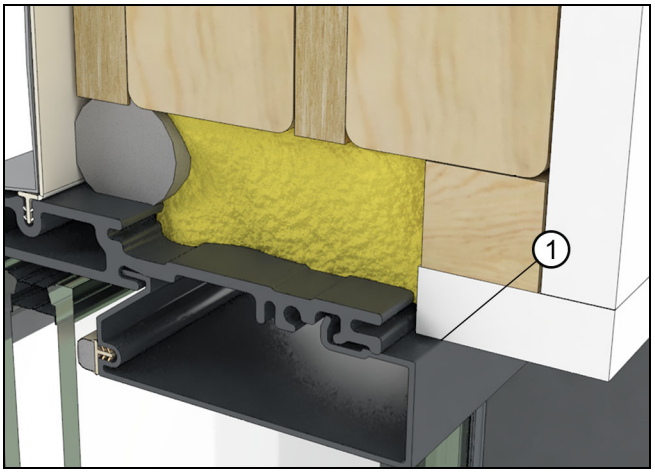

Figure 40

1	Do not block the cover with drywall

Installing the Crank Handle

1. Seat the handle on the hardware spline. Turn the crank handle until the sash is completely closed. See Figure 41.

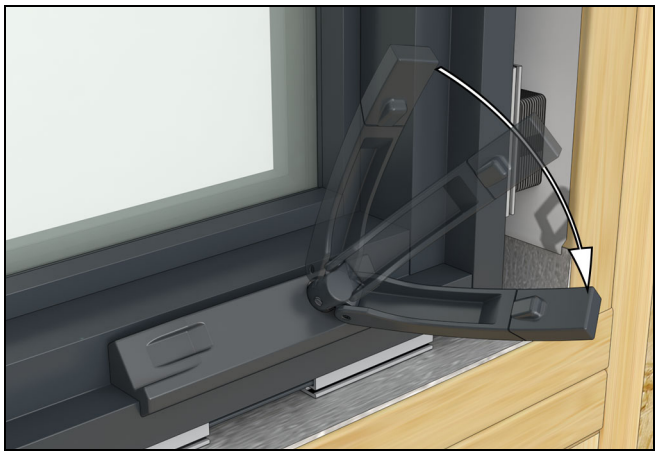

Figure 41

2. Remove the handle from the spline. Re-seat the handle aligned slightly lower than horizontal then tighten the set screw. See Figure 42.

Figure 42

3. Nest the handle in the recess. See Figure 43.

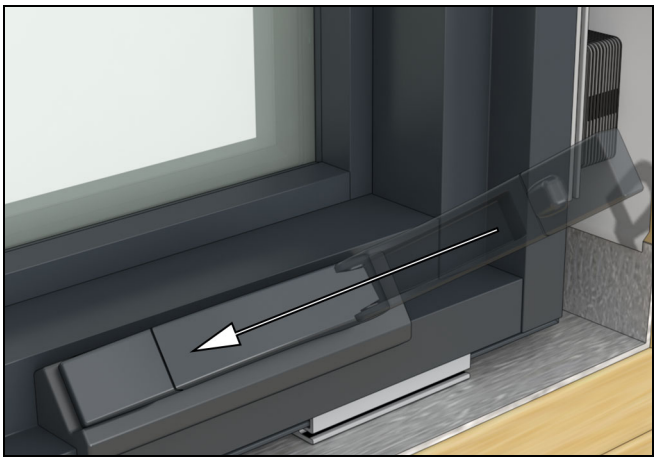

Figure 43

Exterior Sealing and Flashing Details

Nailing Fin Details

1. If installed, seal behind the nailing fin at the jambs and head jamb. See Figure 44 and Figure 45.

Figure 44

Figure 45

2. Optional: Complete fastening nailing fin around the perimeter.

Flashing Modern Window Installations

IMPORTANT

Nailing fin is not designed to be a weatherproof flashing.

IMPORTANT

Follow the flashing tape manufacturer's recommended instructions for attaching to the building material under the WRB. For example, priming wet or frozen wood, application temperature, etc.

1. If installed, seal behind the nailing fin at the jambs and head jamb. See Figure 44 and Figure 45.

Figure 46

Figure 47

2. On units that use nailing fin, apply a 2" x 4" strip of flashing material at 45 degrees to the corner, bridging the gap between the nailing fin. Do this at all 4 corners. See Figure 48.

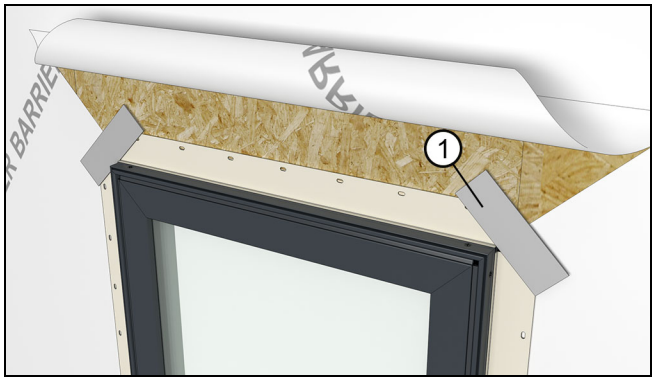

Figure 48

1	2" x 4" strip of flashing material

3. Apply a bead of sealant between the gasket and the window exterior. Tool the sealant out. See Figure 49.

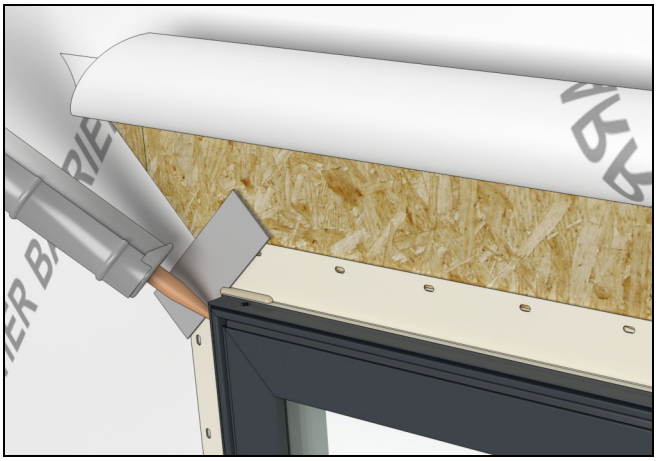

Figure 49

4. Install a rigid head flash. Apply sealant to all surfaces that will come in contact with the flashing. Flashing should extend past the window frame by at least 1/8" (3) on each side. See Figure 50.

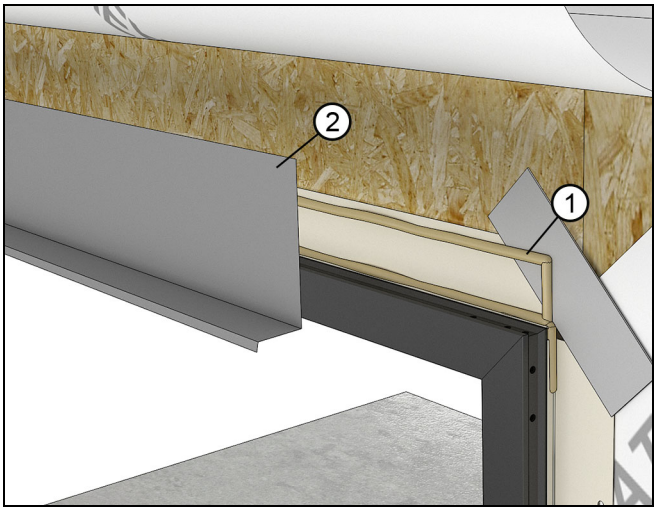

Figure 50

1	Sealant
2	Rigid head flash

5. OPTIONAL SKIRT: Install an optional "skirt" in applications with exposure to wind driven rain/climate. Use flashing material or a 12" (305) strip of WRB and attach to the sill of the window with seam seal tape or flashing tape. See Figure 51.

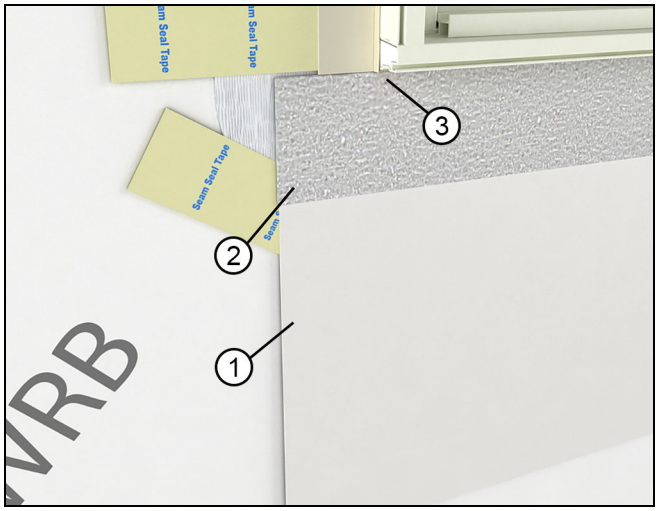

Figure 51

1	Skirt (WRB material or other)
2	Adhesive tape
3	Attached to sill of window

6. Lap vertical strips of adhesive flashing tape onto the window and out over the WRB. Make small diagonal cuts at the head jamb as in Figure 52 to allow the membrane to fold back onto the exterior and frame.

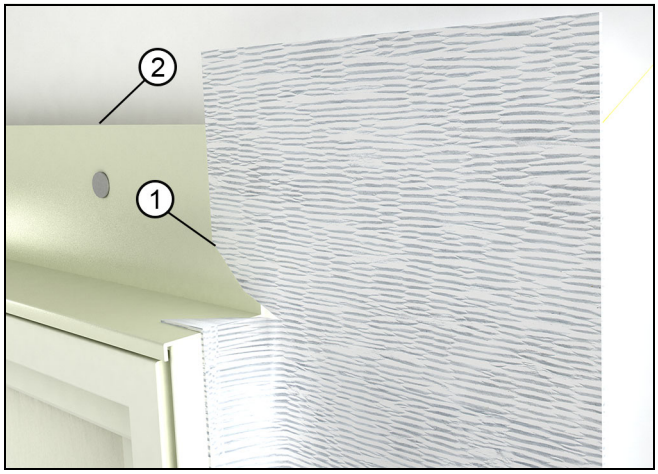

Figure 52

1	Diagonal cut in flashing
2	Rigid head flash

7. Install another layer of adhesive membrane lapping onto the rigid head flash of the window and over the sheathing. The membrane flashing at the head jamb should extend and cover the flashing previously installed at the jambs. Make relief cuts and fold down so the that it wraps around the jamb. See Figure 53 and Figure 54.

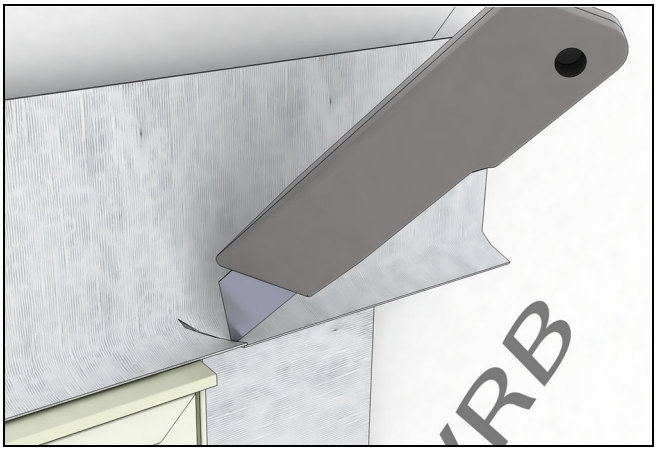

Figure 53

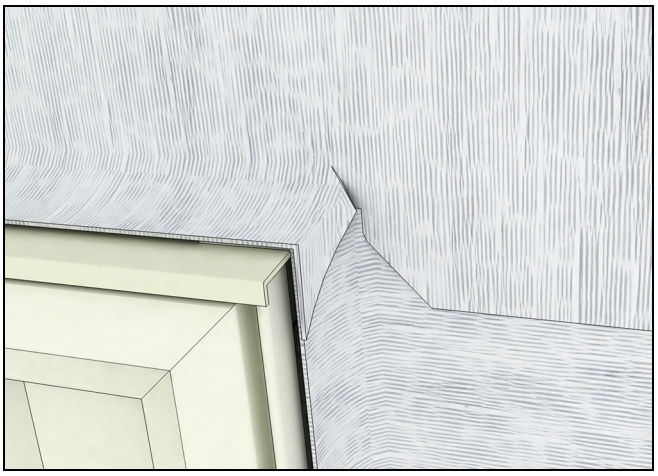

Figure 54

8. Tape the top edge of the head jamb flashing with seam seal tape. See Figure 55.

Figure 55

9. Seal the ends of the rigid head flash by injecting sealant at each end. See Figure 56.

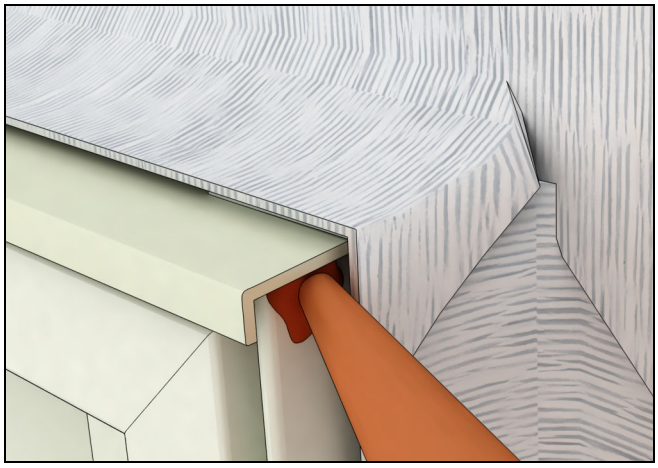

Figure 56

10. Fold the head jamb WRB down over the head jamb flashing. Apply seam seal tape over the diagonal cut in the WRB. Make sure the seam seal laps onto the window. Tape any seams and fasteners directly above the unit with seam seal tape. See Figure 57.

NOTE: This does not apply to self adhered WRB.

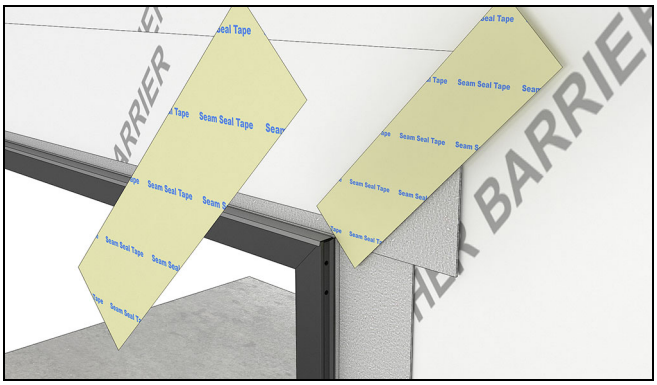

Figure 57

Insulating and Sealing the Installation

1. Apply insulation in the rough opening, against the backer rod installed earlier. Seal all joints where drywall returns to the window frame. See Figure 58.

IMPORTANT

Do not install drywall over the interior frame cover. This will hinder the ability to remove the cover later. When applying sealant between the cover and drywall, use a paintable caulk.

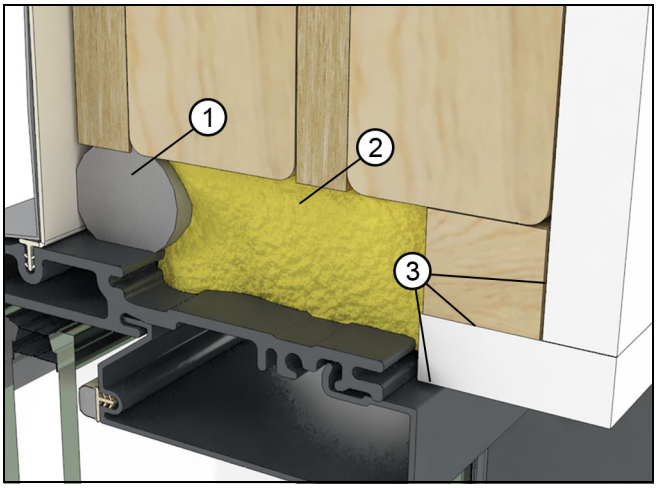

Figure 58

1	Exterior backer rod
2	Insulation
3	Sealant

2. At the exterior, once the exterior finish such as siding or brick veneer is installed, apply a bead of sealant between the finish and the frame exterior along the sides. Apply additional beads approximately 1"-2" (25-51) at the ends on top of the head jamb flashing. Use a backer rod when necessary. See Figure 59 and Figure 60.

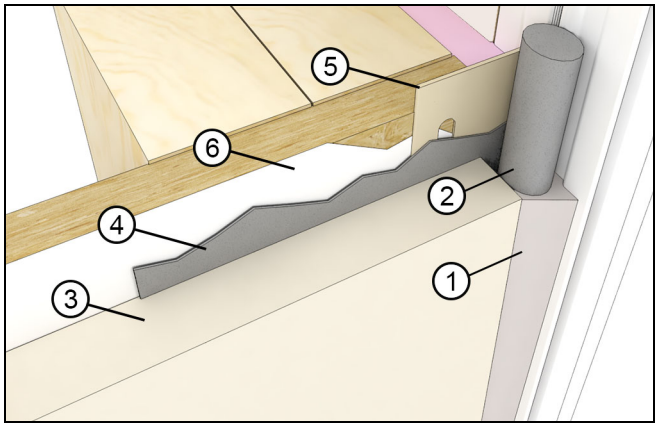

Figure 59

Figure 60

ⓘ CAUTION!

Perimeter sealant must be Grade NS Class 25 per ASTM C920 and compatible with the window product and the finished exterior(s) of the building. Using improper sealant could result in sealant failure casing air and water infiltration.

Casement and Direct Glaze Mulling

Units are prepped for mulling and include an attached mull pin to the right hand jamb of the left side unit (A1 as seen from the exterior). Subsequent units at the middle of the mull will have the mull pin fastened to the right hand jamb at the factory. Units prepped for mulling will also have the shim spacers attached at the fastener locations, and nailing fin where applicable. See Figure 61.

IMPORTANT

A level and flat sill is crucial when installing and mulling units in the opening. The sill should be within 1/16" flat and level to achieve a successful mull and installation.

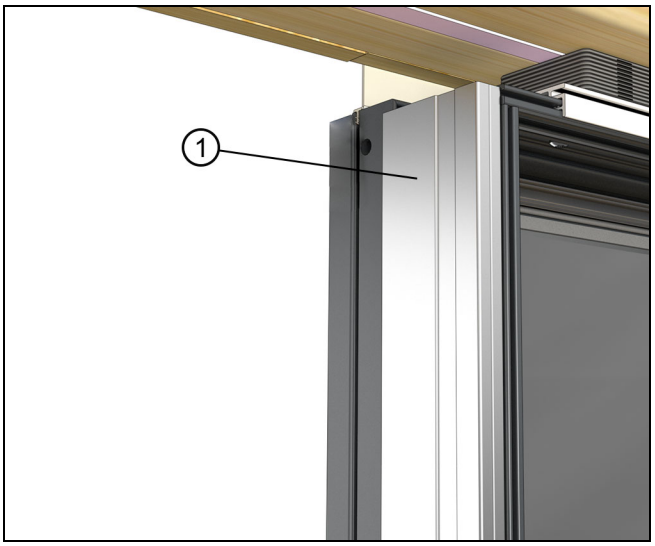

Figure 61 A1 units prepped for field mull (viewed from interior)

1	Mull pin (fastened from the inside of A1 unit)

Prep for Mulling

NOTE: If you are mulling an assembly in place set the first window (A1) in the opening and fasten the jamb, sill, and head jamb. See Figure 62. The illustrations that follow in this section show a 3-wide unit with two vertical mulls, mulled in the opening. If you are mulling the assembly before installation follow step 1 on page 25 through step 6 on page 28.

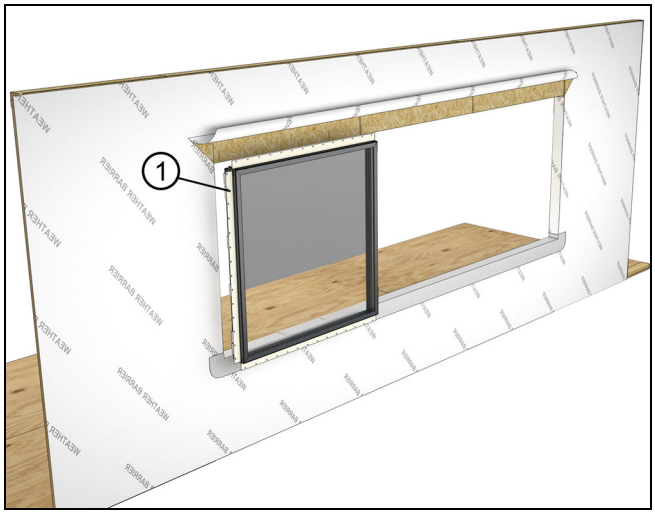

Figure 62 Install the first window (A1)

1	A1 (in mull configurations)

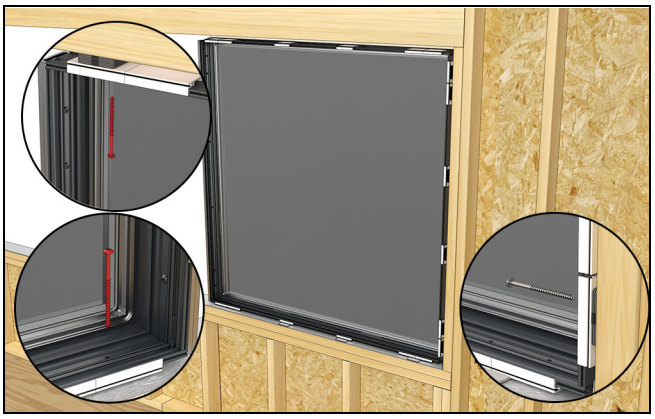

Figure 63

1. Apply a continuous 1/4" (6) bead of sealant along the length of the frame. See Figure 64.

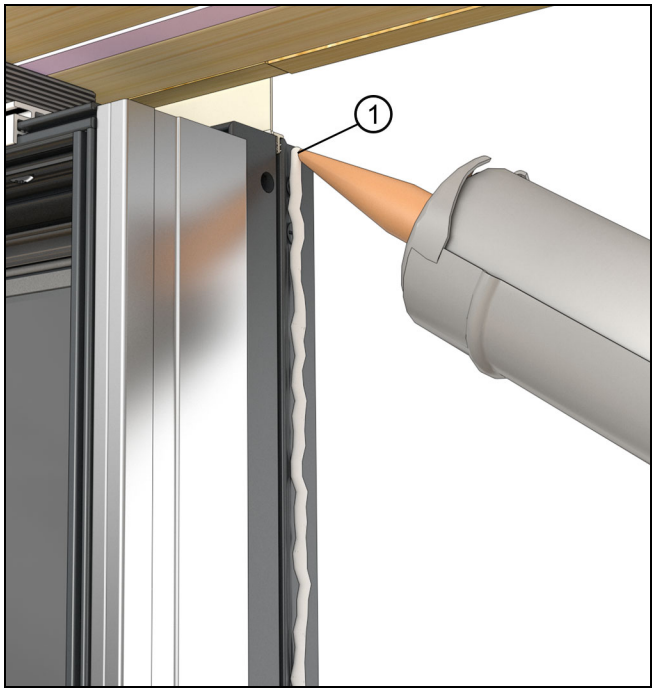

Figure 64

1	Apply sealant full length.

Join the Assembly

IMPORTANT

Make sure the sill is level and flat before installing and mulling assemblies.

1. Set the next unit close to the A1 unit. Clamp the two units together making sure the windows are flush to one another on all planes (interior/exterior and top and bottom). See Figure 65 and Figure 66.

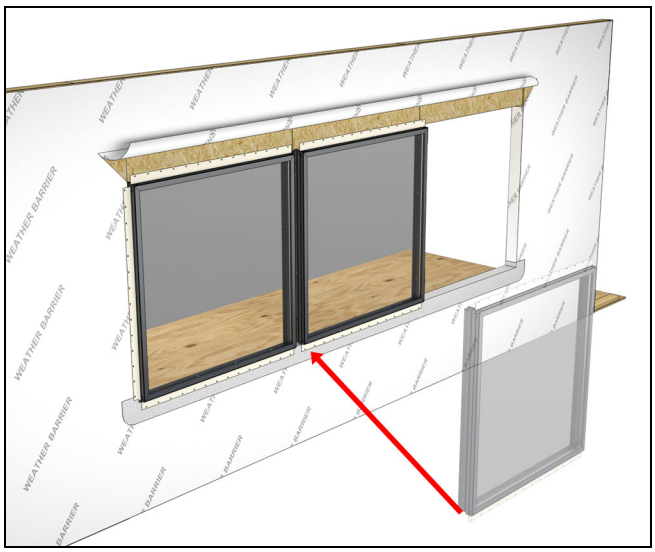

Figure 65

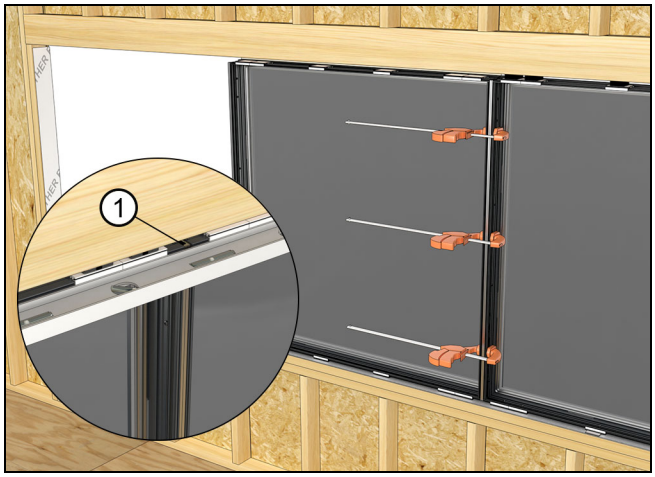

Figure 66

1	Flush the frames to one another.

2. Fasten at each pre-drilled hole location with the #8 x 7/16" Phillips head self drilling screws provided. See Figure 67.

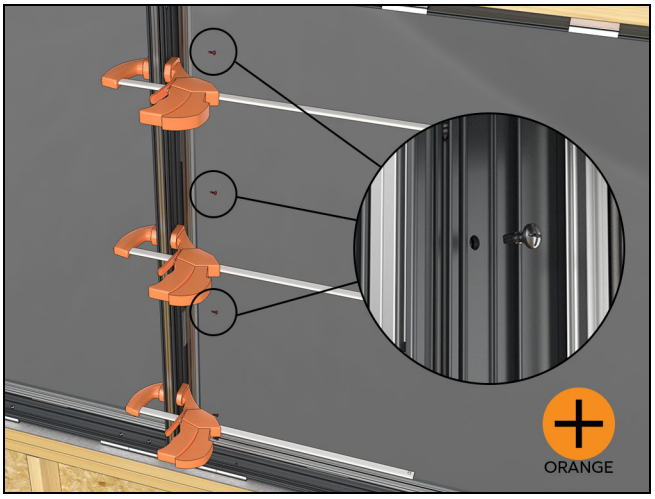

Figure 67

3. Apply the exterior covers. These can be seated with a rubber mallet. Make sure the covers are flush to the exterior accessory kerf. See Figure 68.

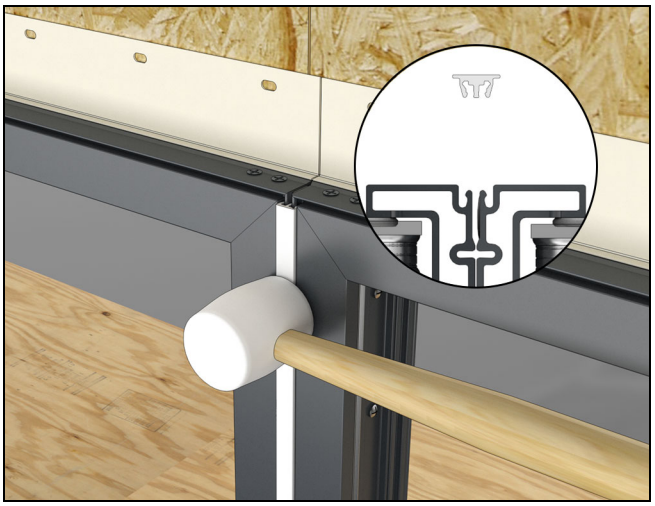

Figure 68

4. Fasten at the head jamb and sill with #10 x3" installation screws. Make sure the frame is plumb to the interior/exterior. See Figure 69 and Figure 70.

Figure 69

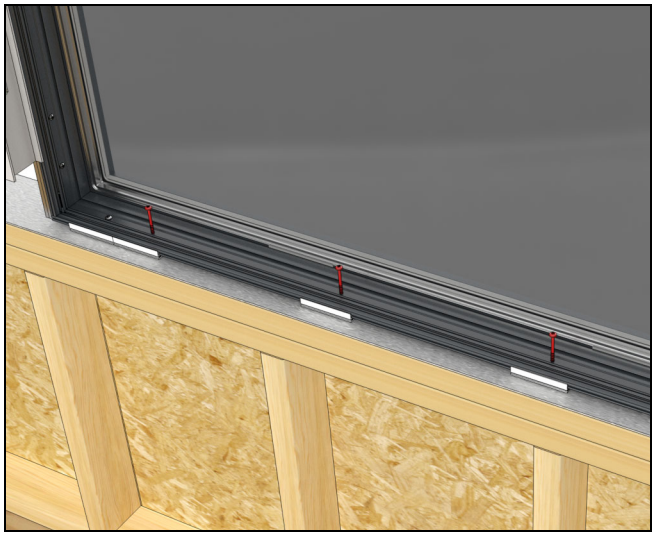

Figure 70

5. Apply the interior aluminum covers. These are barbed on and can be seated with a rubber mallet. Make sure the covers are flush to the interior accessory kerf. See Figure 71.

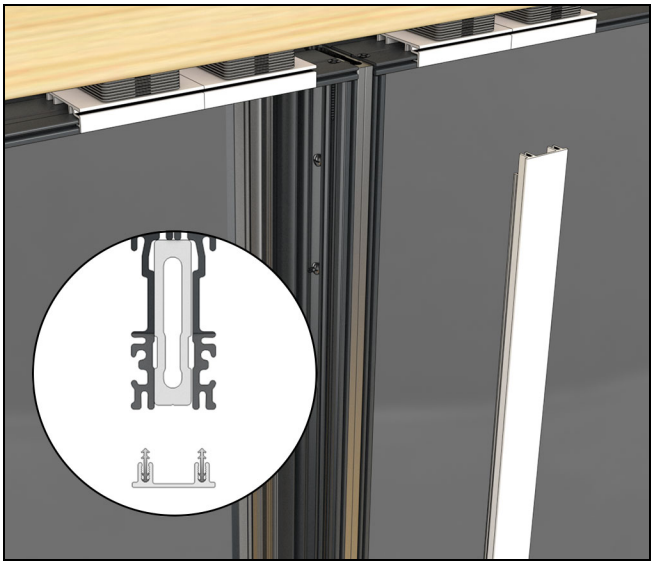

Figure 71

IMPORTANT

Apply the mull caps between each window in multiple assemblies before joining the next window.

6. Repeat the previous steps until the entire assembly is complete. See Figure 72.

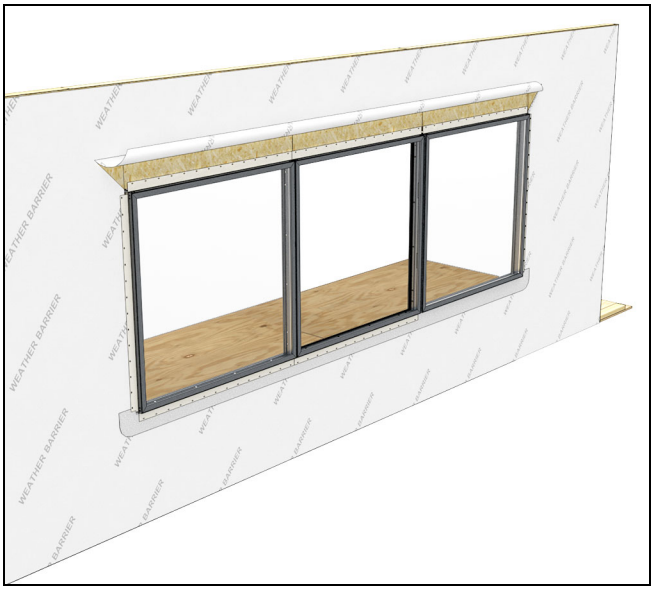

Figure 72

Horizontal Mulls

Use the techniques outlined in the previous sections to apply a horizontal mull. Install the lower units first. They will have the mull pin attached. Then set the top unit above, being careful not to disturb the sealant bead until you have the assembly aligned correctly. See Figure 73.

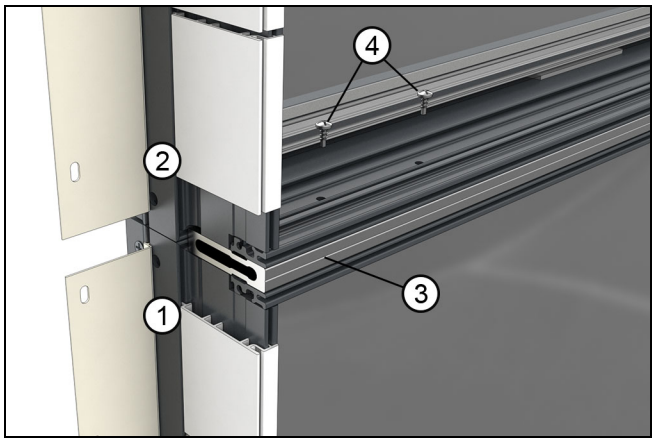

Figure 73 Horizontal mull (framing not shown for illustrative purpose)

1	B1 unit
2	A1 unit
3	Mull pin
4	#8 x 7/16" Torx T20 self drilling screws

Multiple High / Multiple Wide Assemblies

On multiple high/multiple wide assemblies a continuous mull pin must be applied to the mull direction with the shortest span. The non-continuous mull pins will be factory installed. Use the techniques outlined in the previous sections to mull the units with factory applied mull pins first. See Figure 74.

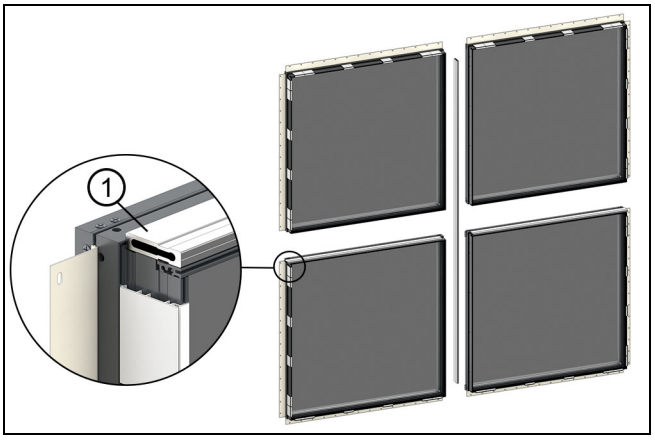

Figure 74 Multiple high and wide assemblies

1	Mull pin factory applied.

Additional Fastening for Some Horizontal Mulls

1. In some cases where the horizontal mull pin is not already fastened to the bottom of the window, you will need to attach the mull pin and then fasten through the hardware base with the 1 3/8" (35) screws found in the bag marked with the grey dot. Pre-drill with a 1/8" (3) drill bit. See Figure 75.

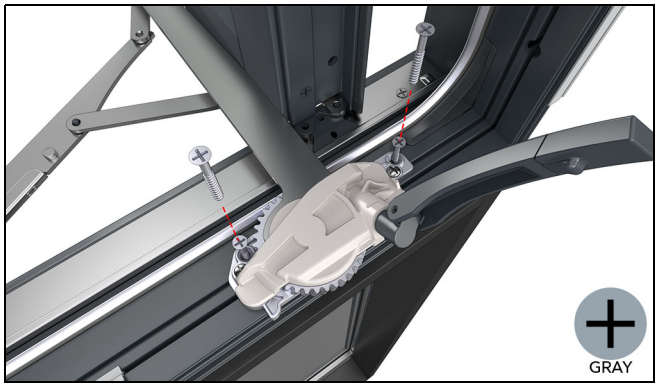

Figure 75

Removing Casement Sash

1. Open the sash approximately 4" (102). See Figure 76.

Figure 76

Using a smartphone or similar device, scan the QR code or click here to play a video of this procedure.

2. With a firm grip on the sash, detach the operator arm from the track by pushing the arm down. See Figure 77 and Figure 78. Crank the arm back to the frame.

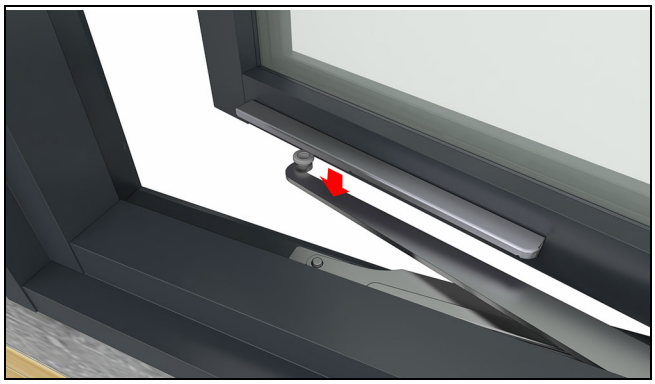

Figure 77

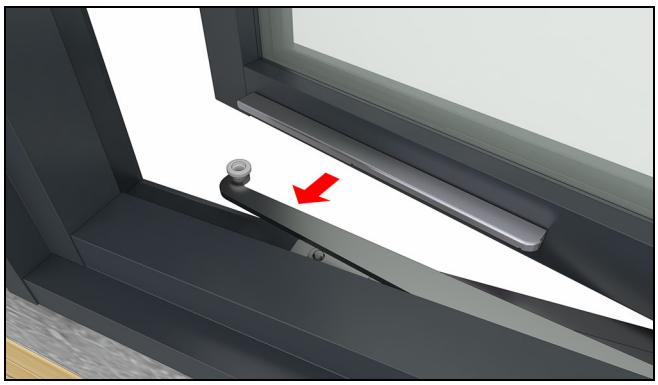

Figure 78

CAUTION!

To avoid damage to the sash and/or personal injury, the sash must be fully supported at all times. Do not rack the hinges during removal, the sash stile must remain parallel to the side jamb when removing or installing the sash. Do not tip or rest the sash on the corners.

3. While fully supporting the sash, detach both the top and bottom hinge linkages from the studs. See Figure 79 and Figure 80.

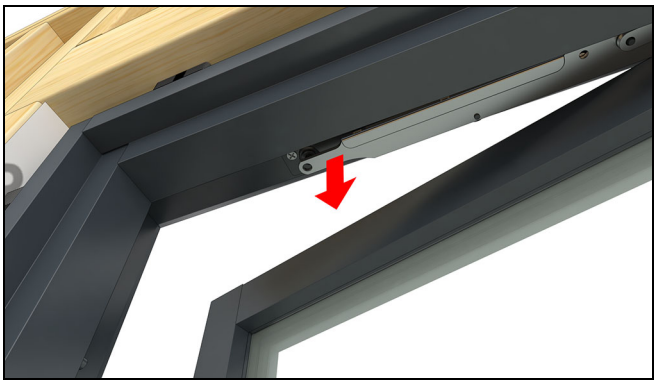

Figure 79

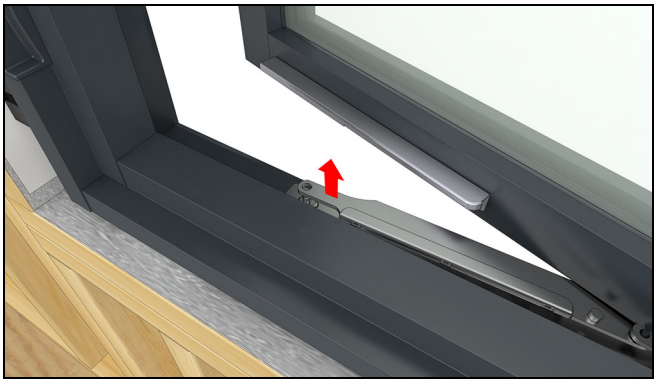

Figure 80

4. Remove the sash by sliding it across the groove in the hinge track. Both hinge shoes must be free of the groove in the hinge track before removal. See Figure 81

Figure 81

5. To reinstall the sash, reverse the removal procedures.

NOTE: Keep the sash shoes flat up against the track just in front of the groove. For ease of installation, keep the sash stile parallel to the side jamb and slide the top shoe into the groove in the track followed by the bottom. The sash should be fully supported until after both sash shoes are securely engaged with the groove in the hinge track, the hinges have been fully seated onto the hinge studs and the operator arm has been attached.

Removing Awning Sash

1. Open the sash approximately 4" (102). See Figure 82.

Figure 82

2. Detach the operator arm from the track by sliding back the clip and then pulling the operator arm down. See Figure 83. Crank the arm back into the frame.

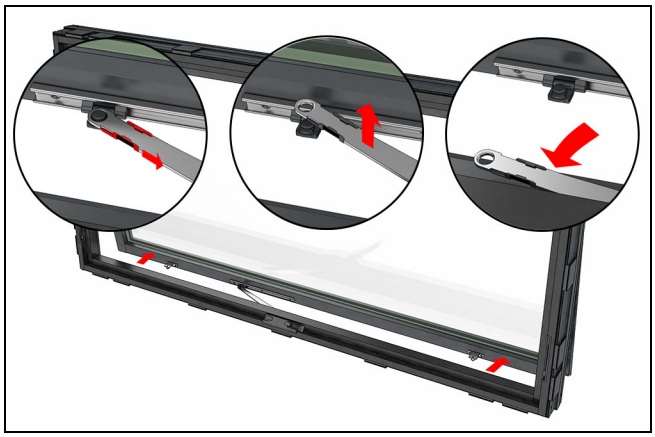

Figure 83

⚠ CAUTION!

To avoid damage to the sash and/or personal injury, the awning sash must be fully supported at all times.

3. While fully supporting the sash, detach the hinge linkages from both sides of the sash. Use a flat head screwdriver to disengage the clip. Pry the hinge arm inward to release the arm from the hinge stud. See Figure 84.

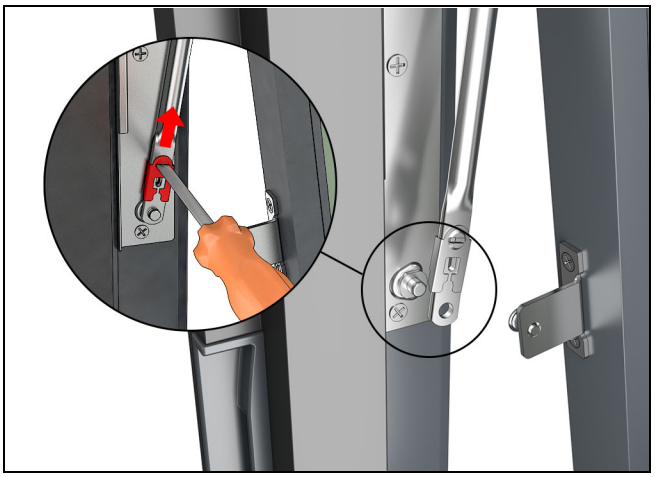

Figure 84

4. Gently lower the sash until the shoe on both sides of the sash are below the groove in the hinge track. Remove the sash from the frame by pulling it outward. See Figure 85.

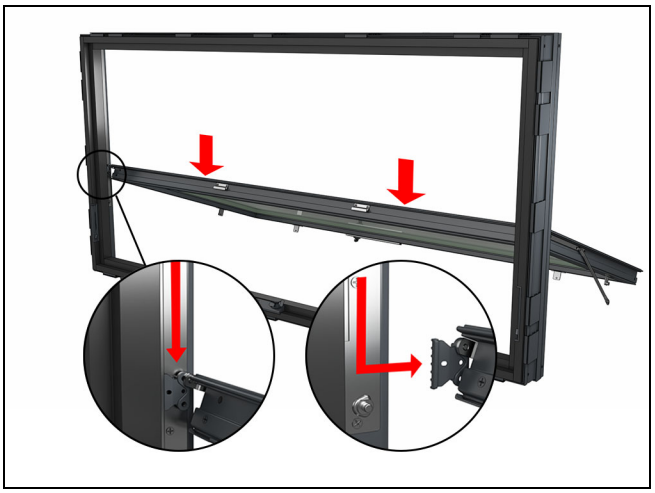

Figure 85

5. To reinstall the sash reverse the sash removal procedures.

NOTE: Keep the sash shoes flat up against the track just in front of the groove. Keep the sash stile parallel to the sill. Slide the sash shoes into the groove in the track. Support the sash fully until both shoes are securely engaged with the hinge track; the hinge arms are placed onto the hinge stud; and clips seated. See Figure 86.

Figure 86

Installing the Casement Screen

1. Align the notch in the screen frame to fit around the hardware cover then tip the screen into place. See Figure 87.

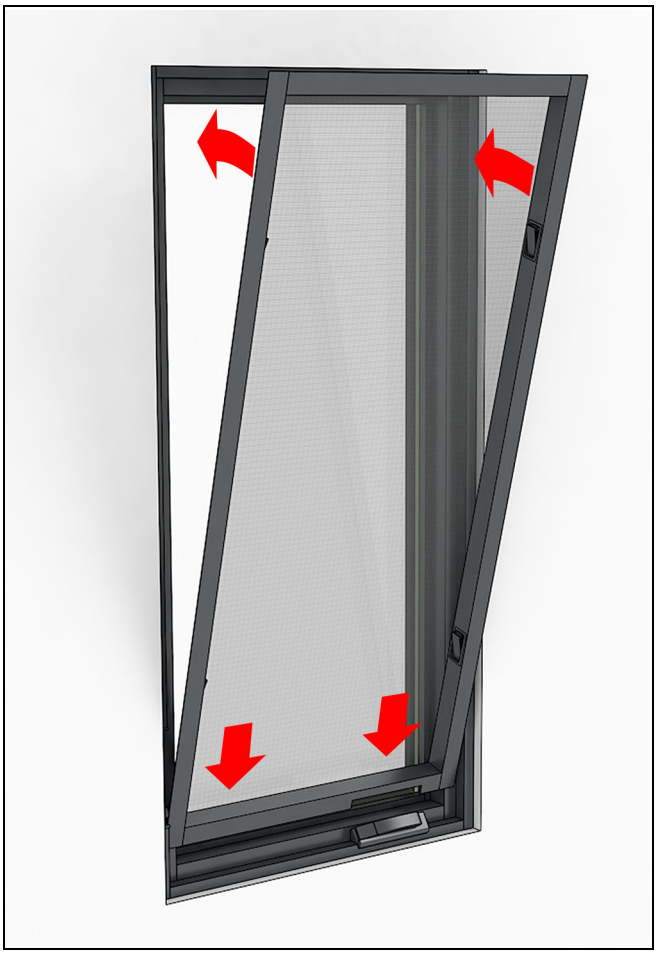

Figure 87

2. Engage the latches to secure the screen in place. See Figure 88.

Figure 88

Installing the Pushout Screen

1. Insert the hinge bar on the screen into the window frame, lining up the pre-drilled holes in the hinge with the pre-drilled holes in the frame. Fasten with the stainless steel screws provided. See Figure 89 and Figure 90.

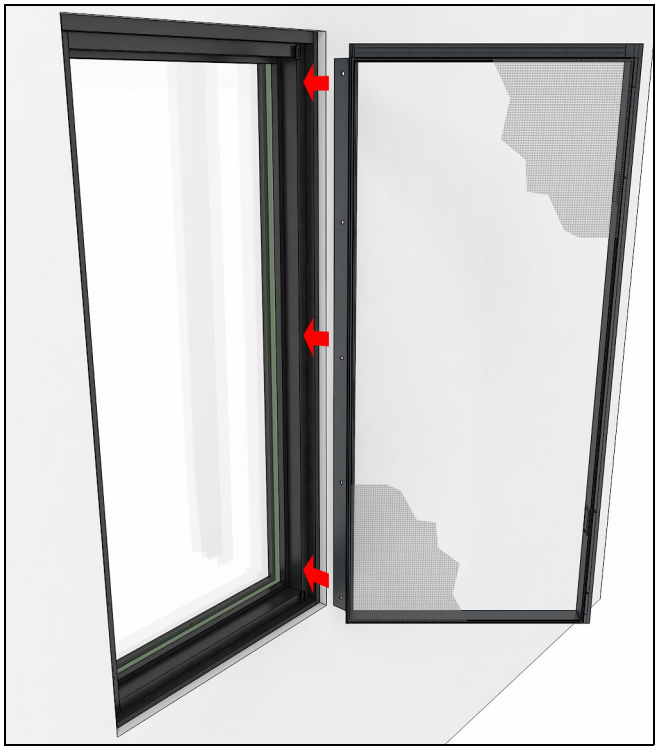

Figure 89

Figure 90