ULTIMATE DOUBLE HUNG/SINGLE HUNG DISC LA PRE 6/29/15
ULTIMATE DOUBLE HUNG/SINGLE HUNG INSERT DISC LA PRE 8/27/18

Table of Contents

	PAGE
History – Ultimate Double Hung	2
History – Ultimate Insert Double Hung	3
Ultimate Double Hung/Single Hung DISC LA PRE 6/29/15	
Part Identification – Ultimate Double Hung DISC LA PRE 6/29/15	4
Part Identification – Ultimate Single Hung DISC LA PRE 6/29/15	5
Part Identification – Ultimate Double Hung DISC LA PRE 6/29/15 (Transom)	6
Part Identification – Ultimate Double Hung DISC LA PRE 6/29/15 (Picture)	7
Ultimate Double Hung Insert DSIC LA PRE 8/27/18	
Part Identification – Ultimate Double/Single Hung Insert DISC LA PRE 8/27/18	8
Part Identification – Ultimate Double Hung Insert DISC LA PRE 8/27/18 (Picture)	9
Part Identification – Ultimate Double Hung Insert DISC LA PRE 8/27/18 (Transom)	10
Hardware Parts	11
Hardware Parts – Ultimate Double Hung/Single Hung Insert DISC LA PRE 8/27/18	16
Balances	17
Jamb Carriers	19
Jamb Carrier Hardware Assemblies	20
Balances and Jamb Carrier Hardware Assemblies – Insert Units DISC LA PRE 8/27/18	22
Wood Parts – Ultimate Double Hung/Single Hung DISC LA PRE 6/29/15	23
Wood Parts – Ultimate Double Hung/Single Hung Insert DISC LA PRE 8/27/18	24
Aluminum Parts	25
Vinyl Parts	26
Weather Strip	27
Sash Replacement	28
Screens	29
Aluminum Screens − Full and Half Screen	30
Aluminum Screen Parts	31
Extruded Aluminum Screens	32
Extruded Aluminum Screen Parts	33
Combinations	34
Combination Parts	36
Discontinued Parts (NA) – No Longer Available	39
Discontinued Aluminum Parts (NA) – No Longer Available	40
Discontinued Wood Parts (NA) – No Longer Available	41
Discontinued Weather Strip (NA) – No Longer Available	42
Discontinued Mulling/Panning Kits and Parts (NA) – No Longer Available	43

Ultimate Double/Single Hung DISC-LA PRE 6/29/15
Ultimate Double/Single Hung Insert DISC-LA PRE 8/27/18

ATTENTION:

- Specification and technical data are subject to change without notice.
- Numbers listed in parentheses ( ) are metric equivalents in millimeters rounded to the nearest whole number.

Produced	Unit Type	Features or Changes
1998	Ultimate Double Hung/Single Hung DISC LA PRE 6/29/15	12/98–1/99: Introduced (regionally to complement above) featuring tilt latch system operated at center sash lock on bottom operating sash. (DH/SH) Top operating sash released at top rail by two tilt latches. (DH) Glass and rough opening sizes remained the same. (DH/SH) Insulating glass overall thickness reduced from .75″ to .70″ on DH/SH units, 1″ overall IG thickness standard on picture and transom units. Sash cladding one piece on exterior (no glazing stops), wood interior joined to cladding utilizing vinyl sash clips. Transom sash aligned vertically with DH/SH top sash. Picture sash aligned vertically with DH/SH bottom sash. Daylight openings align in mulled configurations.
2001	Ultimate Double Hung/Single Hung DISC LA PRE 6/29/15	4/16/01: Redesigned the combination
2002	Ultimate Double Hung/Single Hung DISC LA PRE 6/29/15	3/02: Stone White becomes standard color. Arctic White transitions to select color.
2003	Ultimate Double Hung/Single Hung DISC LA PRE 6/29/15	3/31/03: Satin Taupe (TP) hardware replaces bronze as standard.
2004	Ultimate Double Hung/Single Hung DISC LA PRE 6/29/15	1/04: Added Oil Rubbed Bronze and Satin Chrome to available hardware finishes
2004	Ultimate Double Hung/Single Hung DISC LA PRE 6/29/15	3/01/04: Changed Transom sash to use the same or similar parts as an operator. Glazing went from 1″ to .700″. Customers will have to specify if they need a replacement sash that was built prior to 03/2004.
2004	Ultimate Double Hung/Single Hung DISC LA PRE 6/29/15	6/14/04: Satin Nickel hardware introduced as a standard option. Polished Chrome hardware discontinued.
2005	Ultimate Double Hung/Single Hung DISC LA PRE 6/29/15	6/05: Extended top rail profile to head jamb and changed to a recessed tilt latch.
2006	Ultimate Double Hung/Single Hung DISC LA PRE 6/29/15	3/23/06: Both WUDH and WUDHM now use same jamb blind stop (W8950). CUDH now uses CUDHM sill (W8849).
2007	Ultimate Double Hung/Single Hung DISC LA PRE 6/29/15	10/22/2007: Created new balance tube hanger. S–hooks are no longer used.
2008	Ultimate Double Hung/Single Hung DISC LA PRE 6/29/15	6/02/2008: Introduced charcoal colored high transparency screen mesh (CH HI–TRAN) as an option on all window and door products (including combinations).
2008	Ultimate Double Hung/Single Hung DISC LA PRE 6/29/15	7/28/2008: Mixed grain Douglas fir is now a standard option.
2009	Ultimate Double Hung/Single Hung DISC LA PRE 6/29/15	3/23/2009: Added LoE^3-366™ as a standard option for all products. Added Cedro Macho as a standard option for all Ultimate products.
2011	Ultimate Double Hung/Single Hung DISC LA PRE 6/29/15	04/25/2011: Added LoE-180™ as a standard option for all products. White painted interior finish option introduced for all products.
2012	Ultimate Double Hung/Single Hung DISC LA PRE 6/29/15	02–27–2012: Introduced taller sizes CN40 and 42 to the product line. Introduced the option magnum screen. 10/29/2012 Interior Square Sticking/Glazing Bead option introduced.
2012	Ultimate Double Hung/Single Hung DISC LA PRE 6/29/15	12–17–2012: Introduced Clear interior finish option on all products.
2013	Ultimate Double Hung/Single Hung DISC LA PRE 6/29/15	04/29/2013: Introduced interior stain options. Stain colors are Wheat, Honey, Leather, Hazelnut, Cabernet and Espresso.
2015	Ultimate Double Hung/Single Hung DISC LA PRE 6/29/15	04/27/2015 and 06/29/2015: Discontinued the sale of the Ultimate Double Hung. Moved to DISC LA PRE 6/29/15 status.
2017	Ultimate Double Hung/Single Hung DISC LA PRE 6/29/15	10/30/2017: Discontinued EP colors with exception of Stone White and Bronze
2020	Ultimate Double Hung/Single Hung DISC LA PRE 6/29/15	6/29/2020: Ultimate Double Hung/Single Hung Disc LA PRE 6/29/2015 full units and replacement frames moved to Discontinued–Not Available (Disc–NA) status. See Product Bulletin 761 for more information.
2022	Ultimate Double Hung/Single Hung DISC LA PRE 6/29/15	6/27/2022: Updated Screen section for current screen mesh, plungers and use of Aluminum Screen and Extruded Aluminum Screen.

Ultimate Double Hung/Single Hung
Disc-LA PRE 6/29/15
Ultimate Double/Single Hung Insert
Disc LA PRE 8/27/18

Produced	Unit Type	Features or Changes
2001	Ultimate Double Hung/Single Hung Insert DISC LA PRE 8/27/18	11/01: Extruded Aluminum frame and sash are designed to be installed into a pre−existing window frame. Same sash tracking/operating system as the full frame.
2001	Ultimate Double Hung/Single Hung Insert DISC LA PRE 8/27/18 (Picture)	11/01: Extruded Aluminum frame and 1″ glazing picture sash are designed to be installed into a pre−existing window frame.
2001	Ultimate Double Hung/Single Hung Insert DISC LA PRE 8/27/18 (Transom)	11/01: Extruded Aluminum frame and sash are designed to be installed into a pre−existing opening.
2001	Ultimate Double Hung/Single Hung Insert DISC LA PRE 8/27/18	11/01: Horizontal and vertical factory mulling available. Also available as field mulling kits.
2001	Ultimate Double Hung/Single Hung Insert DISC LA PRE 8/27/18	11/01: 2−piece extruded aluminum panning kits available in BMC and flat casing profiles.
2002	Ultimate Double Hung/Single Hung Insert DISC LA PRE 8/27/18	3/02: Stone White becomes standard color. Arctic White transitions to select color.
2003	Ultimate Double Hung/Single Hung Insert DISC LA PRE 8/27/18	4/03: Satin Taupe (TP) replaces Bronze as standard hardware color.
2017	Ultimate Double Hung/Single Hung Insert DISC LA PRE 8/27/18	10/30/2017: Discontinued Ep colors with exception of Stone White and Bronze
2018	Ultimate Double Hung/Single Hung Insert DISC LA PRE 8/27/18	8/27/2018: Discontinued the sale of Ultimate Double Hung/Single Hung Insert products. Moved to DISC LA PRE 8/27/18 status.
2020	Ultimate Double Hung/Single Hung Insert DISC LA PRE 8/27/18	6/29/2020: Ultimate Double Hung/Single Hung Insert Disc LA PRE 8/27/2018 full units and replacement frames moved to Discontinued−Not Available (Disc−NA) status. See Product Bulletin 760 for more information.
2022	Ultimate Double Hung/Single Hung Insert DISC LA PRE 8/27/18	6/27/2022: Updated Screen section for current screen mesh, plungers and use of Aluminum Screen and Extruded Aluminum Screen.

Ultimate Double/Single Hung DISC-LA PRE 6/29/15
Ultimate Double/Single Hung Insert DISC-LA PRE 8/27/18

ULTIMATE DOUBLE HUNG DISC LA PRE 6/29/15

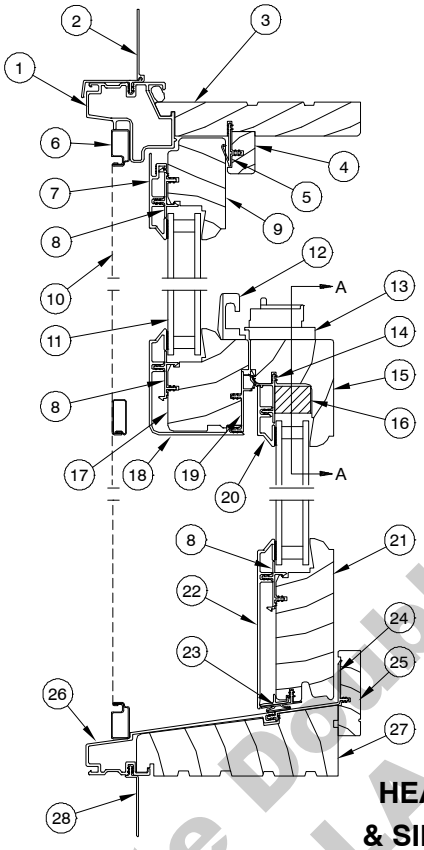

HEAD JAMB & SILL DETAIL

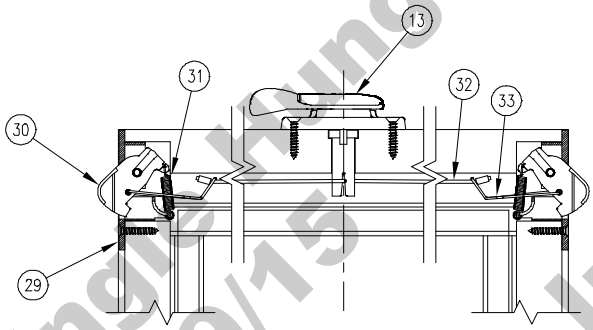

SECTION A–A

Bottom Sash **Top Sash**

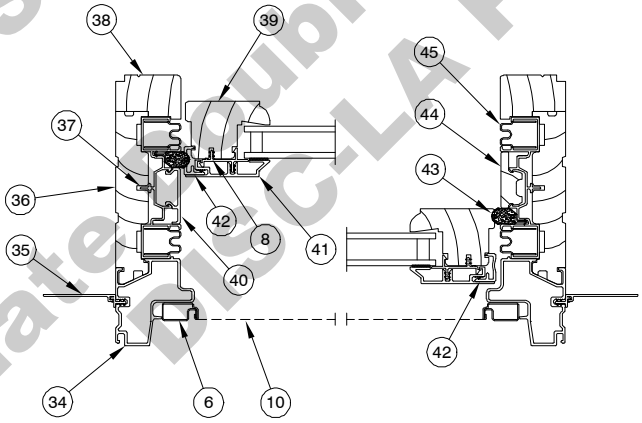

JAMB DETAIL

NOTE: Not to scale; specifications subject to change without notice.

1. Head Jamb Cladding
2. Head Jamb Nailing Fin/Drip Cap
3. Head Jamb
4. Parting Stop, W2530
5. Parting Stop Weather Strip, V945
6. Screen Frame
7. Top Rail Cladding
8. Sash Cladding Connector
9. Top Rail
10. Screen Mesh
11. Insulating Glass
12. Sash Keeper
13. Sash Lock
14. Bottom Check Rail Cladding Connector, V929
15. Bottom Check Rail
16. Bottom Check Rail Subassembly (See Section A–A)
17. Top Check Rail
18. Top Check Rail Cladding
19. Top Check Rail Weather Strip, V920
20. Bottom Check Rail Cladding
21. Bottom Rail
22. Bottom Rail Cladding
23. Bottom Rail Weather Strip, V937
24. Sill Cover, V931
25. Sill Liner, W2531
26. Sill Cladding
27. Sill
28. Sill Nailing Fin
29. End plate
30. Locking Blade
31. Extension Spring
32. Operation Chord
33. Pull Yoke
34. Jamb Cladding
35. Side Jamb Nailing Fin
36. Side Jamb
37. Vinyl Jamb Carrier, V100
38. Jamb Liner, W2533
39. Stile
40. Clad Jamb Filler, A197
41. Stile Cladding
42. Contact Strip, V943
43. Frame Weather Strip, (replace with V03291)
44. Wood Jamb Filler, W2018
45. Sash Balance Tube

Ultimate Double/Single Hung DISC-LA PRE 6/29/15
Ultimate Double/Single Hung Insert DISC-LA PRE 8/27/18

ULTIMATE SINGLE HUNG DISC LA PRE 6/29/15

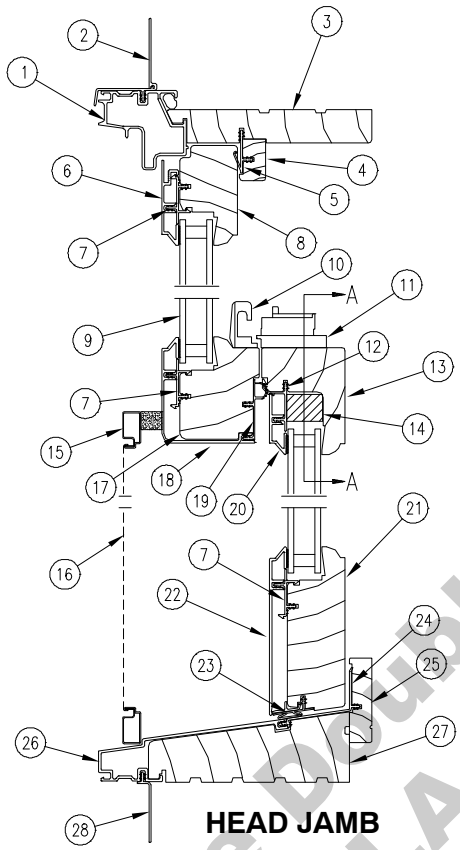

HEAD JAMB & SILL DETAIL

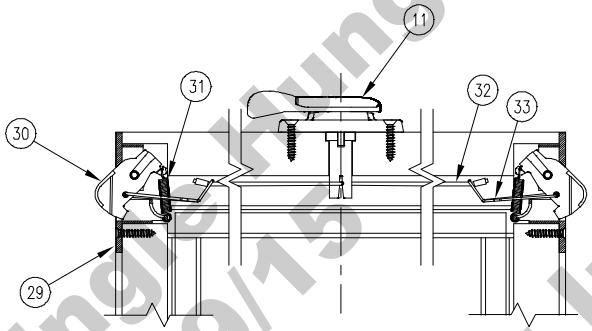

SECTION A–A

Bottom Sash **Top Sash**

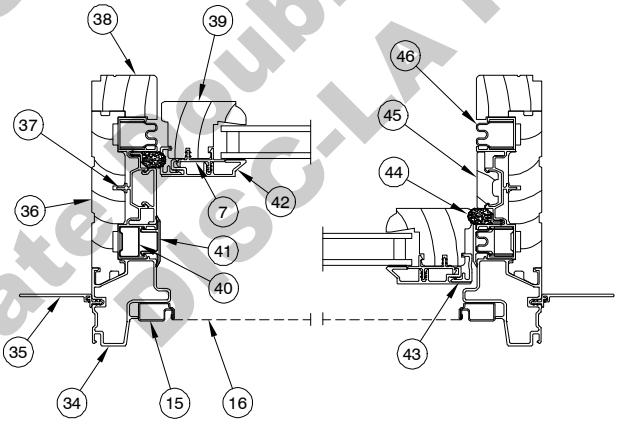

JAMB DETAIL

NOTE: Not to scale; specifications subject to change without notice.

1. Head Jamb Cladding
2. Head Jamb Nailing Fin/Drip Cap
3. Head Jamb
4. Parting Stop, W2530
5. Parting Stop Weather Strip, V945
6. Top Rail Cladding
7. Sash Cladding Connector
8. Top Rail
9. Insulating Glass
10. Sash Keeper
11. Sash Lock
12. Bottom Check Rail Cladding Connector, V929
13. Bottom Check Rail
14. Bottom Check Rail Subassembly (See Section A–A)
15. Screen Frame
16. Screen Mesh
17. Top Check Rail
18. Top Check Rail Cladding
19. Top Check Rail Weather Strip, V920
20. Bottom Check Rail Cladding
21. Bottom Rail
22. Bottom Rail Cladding
23. Bottom Rail Weather Strip, V937
24. Sill Cover, V931
25. Sill Liner, W2531
26. Sill Cladding
27. Sill
28. Sill Nailing Fin
29. End Plate
30. Locking Blade
31. Extension Spring
32. Operation Chord
33. Pull Yoke
34. Jamb Cladding
35. Side Jamb Nailing Fin
36. Side Jamb
37. Vinyl Jamb Carrier, V100
38. Jamb Liner, W2533
39. Stile
40. Sash Stop
41. Sash Filler
42. Stile Cladding
43. Contact Strip, V943
44. Frame Weather Strip (replace with V03291)
45. Wood Jamb Filler, W2018
46. Sash Balance Tube

Ultimate Double/Single Hung DISC-LA PRE 6/29/15
Ultimate Double/Single Hung Insert Disc-LA PRE 8/27/18

ULTIMATE DOUBLE HUNG DISC LA PRE 6/29/15 (TRANSOM)

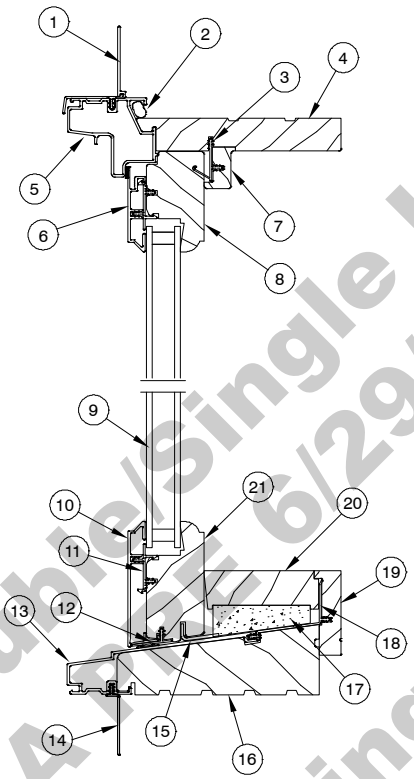

HEAD JAMB
& SILL DETAIL

JAMB DETAIL

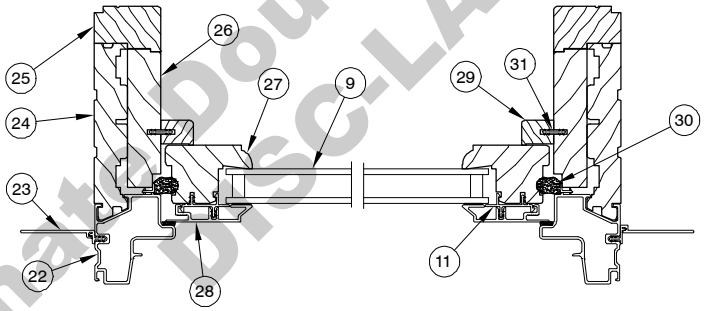

NOTE: Not to scale; specifications subject to change without notice.

1. Head Jamb Nailing Fin/Drip Cap
2. 3/8″ Foam Backer Rod
3. Head Jamb Part Stop Weather Strip, V945
4. Head Jamb
5. Head Jamb Cladding
6. Top Rail Cladding
7. Head Jamb Part Stop, W8969
8. Top Rail
9. Insulated Glass
10. Bottom Rail Cladding
11. Sash Cladding Connector
12. Bottom Rail Weather Strip, V937
13. Sill Cladding
14. Sill Nailing Fin
15. Sill Bracket
16. Sill
17. Foam Sill Filler
18. Sill Cover, V931
19. Sill Liner, W8589
20. Sill Filler, W8591
21. Bottom Rail
22. Jamb Cladding
23. Jamb Nailing Fin
24. Jamb
25. Interior Jamb Liner, W2533
26. Jamb Filler, W8080
27. Stile
28. Stile Cladding
29. Interior Sash Stop, W3111
30. Weather Strip (replace with V03291)
31. Connecting Barb

Ultimate Double/Single Hung DISC-LA PRE 6/29/15
Ultimate Double/Single Hung Insert DISC-LA PRE 8/27/18

ULTIMATE DOUBLE HUNG DISC LA PRE 6/29/15 (PICTURE)

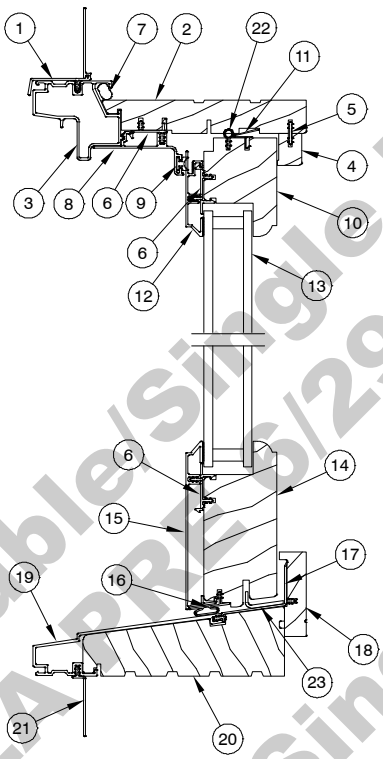

HEAD JAMB & SILL DETAIL

JAMB DETAIL

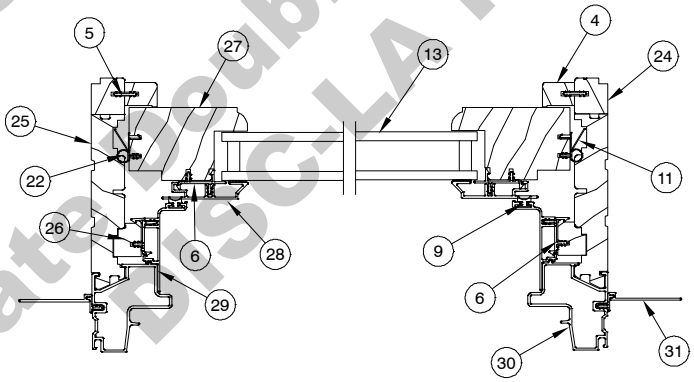

NOTE: Not to scale; specifications subject to change without notice.

1. Head Jamb Nailing Fin/Drip Cap
2. Head Jamb
3. Head Jamb Cladding
4. Interior Sash Stop, W3111
5. Connecting Barb
6. Sash Cladding Connector
7. Foam Backer Rod
8. Head Jamb Filler Cladding
9. Filler Weather Strip, V196
10. Top Rail
11. Vinyl Retainer, V130
12. Top Rail Cladding
13. Insulating Glass
14. Bottom Rail
15. Bottom Rail Cladding
16. Bottom Rail Weather Strip, V937
17. Sill Cover, V931
18. Sill Liner, W8589
19. Sill Cladding
20. Sill
21. Sill Nailing Fin
22. Sash Weather Strip, V1297
23. Sill Bracket
24. Jamb Liner, W2025
25. Jamb
26. Jamb Block, W2023
27. Stile
28. Stile Cladding
29. Jamb Filler Cladding
30. Jamb Cladding
31. Jamb Nailing Fin

Ultimate Double/Single Hung DISC-LA PRE 6/29/15
Ultimate Double/Single Hung Insert DISC-LA PRE 8/27/18

ULTIMATE DOUBLE HUNG/SINGLE HUNG DISC LA PRE 8/27/18

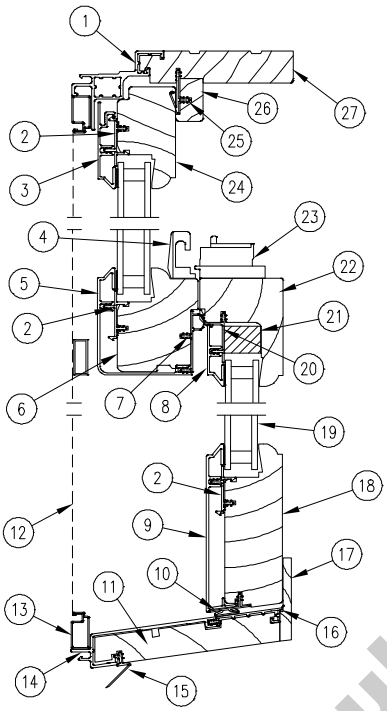

HEAD JAMB AND SILL DETAILS

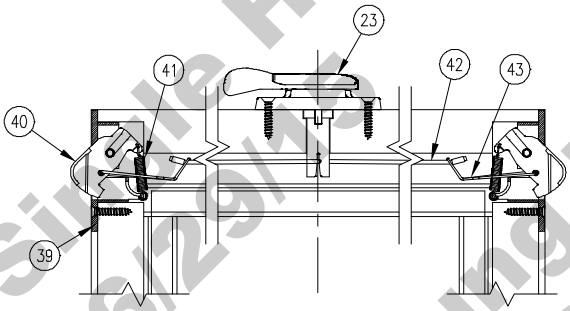

SECTION A–A

JAMB DETAIL

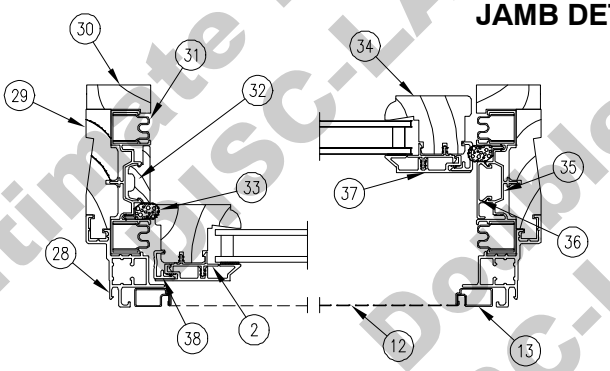

Double Hung

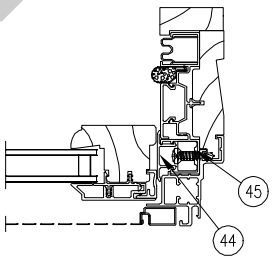

Single Hung

NOTE: Not to scale; specifications subject to change without notice.

1. Head Jamb Cladding
2. Sash Cladding Connector
3. Top Rail Cladding
4. Sash Keeper
5. Top Check Rail Cladding
6. Top Check Rail
7. Top Check Rail Weather Strip
8. Bottom Check Rail Cladding
9. Bottom Rail Cladding
10. Bottom Rail Weatherstrip
11. Sill
12. Screen Mesh
13. Screen Frame
14. Sill Cladding
15. Sill Fin
16. Sill Thermal Break
17. Sill Liner
18. Bottom Rail
19. Insulating Glass
20. Bottom Check Rail Cladding Connector
21. Bottom Check Rail Subassembly (see sect. A–A)
22. Bottom Check Rail
23. Sash Lock
24. Top Rail
25. Parting Stop Weatherstrip
26. Parting Stop
27. Head Jamb
28. Jamb Cladding
29. Side Jamb
30. Jamb Liner
31. Sash Balance Tube
32. Wood Jamb Filler
33. Frame Weatherstrip
34. Stile
35. Vinyl Jamb Carrier
36. Jamb Cover
37. Stile Cladding
38. Contact Strip
39. Endplate
40. Locking Blade
41. Extension Spring
42. Operation Cord
43. Pull Yoke
44. Sash Cover
45. Sash Stop

Ultimate Double/Single Hung DISC-LA PRE 6/29/18
Ultimate Double/Single Hung Insert DISC-LA PRE 8/27/18

ULTIMATE DOUBLE HUNG INSERT DISC LA PRE 8/27/18 (PICTURE)

HEAD JAMB AND SILL DETAILS

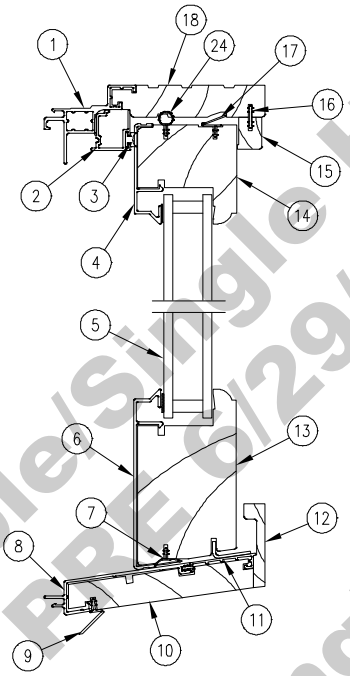

JAMB DETAIL

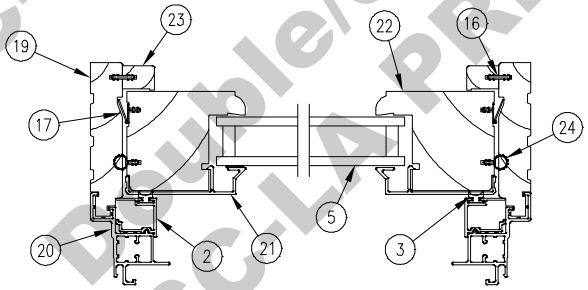

Ultimate Double/Single Hung DISC-LA PRE 6/29/15
Ultimate Double/Single Hung Insert DISC-LA PRE 8/27/18

NOTE: Not to scale; specifications subject to change without notice.

1. Head Jamb Cladding
2. Exterior Stop
3. Filler Weatherstrip
4. Top Rail Cladding
5. Insulating Glass
6. Bottom Rail Cladding
7. Bottom Rail Weatherstrip
8. Sill Cladding
9. Sill Fin
10. Sill
11. Sill Thermal Break
12. Sill Liner
13. Bottom Rail
14. Top Rail
15. Interior Sash Stop
16. Vinyl Connecting Barb
17. Vinyl Retainer
18. Head Jamb
19. Jamb
20. Jamb Cladding
21. Stile Cladding
22. Stile
23. Interior Sash Stop
24. Frame Weather Strip

ULTIMATE DOUBLE HUNG INSERT DISC LA PRE 8/27/18 (TRANSOM)

HEAD JAMB AND SILL DETAILS

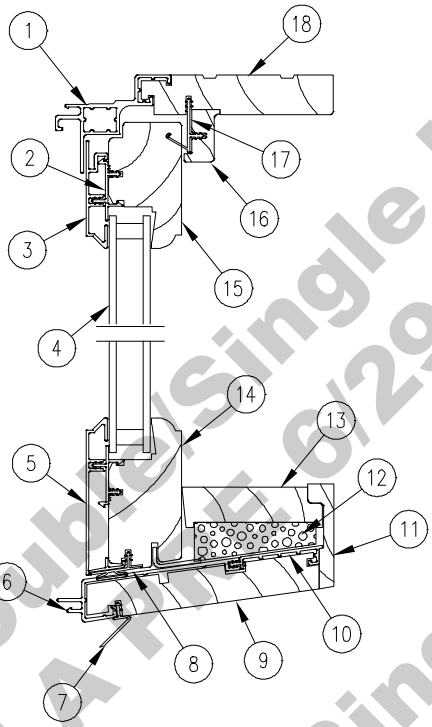

JAMB DETAIL

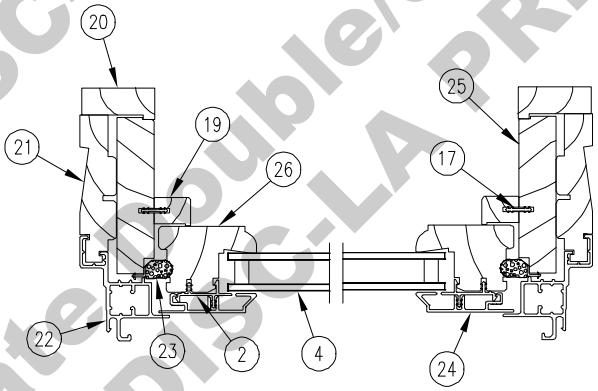

Ultimate Double/Single Hung DISC-LA PRE 6/29/15
Ultimate Double/Single Hung Insert DISC-LA PRE 8/27/18

NOTE: Not to scale; specifications subject to change without notice.

1. Head Jamb Cladding
2. Sash Cladding Connector
3. Top Rail Cladding
4. Insulating Glass
5. Bottom Rail Cladding
6. Sill Cladding
7. Sill Fin
8. Bottom Rail Weather Strip
9. Sill
10. Sill Thermal Break
11. Sill Liner
12. Foam Sill Filler
13. Wood Sill Filler
14. Bottom Rail
15. Top Rail
16. Head Jamb Partstop
17. Vinyl Connecting Barb
18. Head Jamb
19. Interior Sash Stop
20. Interior Jamb Liner
21. Jamb
22. Jamb Cladding
23. Frame Weather Strip
24. Sash Cladding
25. Jamb Filler
26. Stile

When ordering replacement parts specify:

1. original order number;
2. type of unit;
3. part number;
4. description.

ILLUSTRATION *NOT TO SCALE*	DESCRIPTION	OPER./COLOR	PART NO.
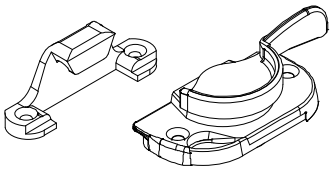	**Sash Lock and Keeper, Complete** *Includes:* *1 – Sash lock* *1 – Keeper* *4 – #7x7/8" Phillips flathead wood screws*	Satin Taupe Bronze White	11869288 11869287 11869286
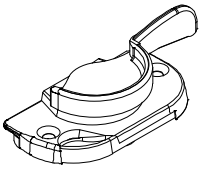	**Sash Lock** *Includes:* *1 – Sash lock* *2 – #7x7/8" Phillips flathead wood screws*	Satin Taupe Bronze White Brass Antique Brass Satin Chrome Satin Nickel Oil Rubbed Bronze Polished Chrome	10500669 10500668 10500662 10500783 10500789 10500784 10500788 10500787 10500785
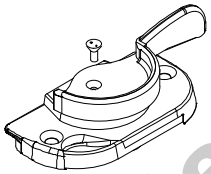	**Custodial Sash Lock** *Includes:* *1 – Sash lock* *2 – #7x7/8" Phillips flathead wood screws* *1 – Tamper resistant screw*	Satin Taupe Bronze White	10500544 10500545 10500546
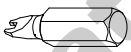	**Tool Bit – Tampered Resistant Screw**		10500543
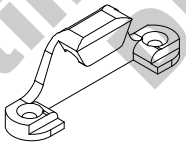	**Keeper** *Includes:* *1 – Keeper* *2 – #7x7/8" Phillips flathead wood screws*	Satin Taupe Bronze White Brass Antique Brass Satin Chrome Satin Nickel Oil Rubbed Bronze Polished Chrome	10500676 10500674 10500670 10500793 10500799 10500794 10500798 10500797 10500795
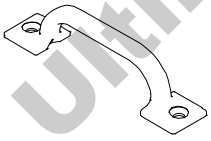	**Sash Lift** *Includes:* *1 – Sash lift* *2 –#8 x 1" slotted oval head sheet metal screws*	Satin Taupe Bronze White Brass Antique Brass Satin Chrome Satin Nickel Oil Rubbed Bronze Polished Chrome	10500598 10500557 10500556 10500558 10500597 10500596 10500602 10500601 10500595

Ultimate Double/Single Hung DISC-LA PRE 6/29/15
Ultimate Double/Single Hung Insert DISC-LA PRE 8/27/18

ILLUSTRATION *NOT TO SCALE*	DESCRIPTION	COLOR	PART NO.
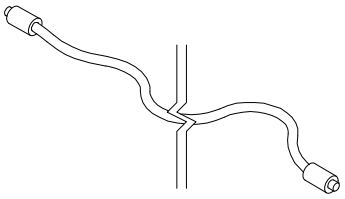	**Multi–Point Tilt Latch Operation Cord** *Measure overall length for special sizes call Marvin to order* CN16 CN20 CN24 CN26 CN28 CN30 CN32 CN36 CN40		10500616 10500620 10500624 10500626 10500628 10500630 10500632 10500636 10500640
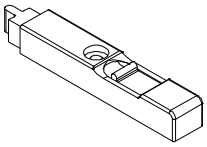	**Top Sash Tilt Latch Assembly** *Ultimate usage 1999 until May, 7, 2005* *Includes:* *1 – Tilt latch assembly* *1 – #7x1 1/4" Phillips flathead wood screws*	Beige	10500555
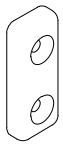	**Sash Limiter** *Includes:* *1 – Sash limiter* *2 – #7 x 3/4" Phillips stainless steel screws*	Beige	10500515
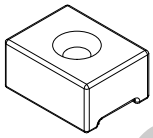	**Sash Stop, Vinyl** *Includes:* *1 – Sash Stop* *1 – #8X1" Phillips flathead wood screw*	Beige	10500525
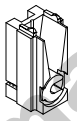	**Clutch Assembly**		10500551
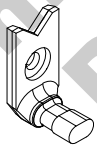	**Clutch Pivot** *Includes:* *1 – Clutch pivot* *1 – #7x1 1/4" Phillips trimhead self tapping screw*		10500550
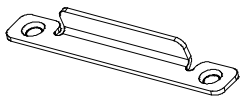	**Sill Bracket** *Includes fasteners:* *2 – #7x3/4" Phillips flathead SS screws* *(Beige– 11800763) (White–11800764)*	Beige White	11841103 11841104
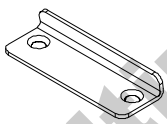	**Sill Bracket** *Includes:* *1 – Sill bracket* *2 – #7 x 7/8″Flathead stainless steel screws*		10500526
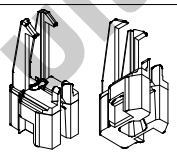	**Balance Tube Shock Pad Assembly**		11860279

Ultimate Double/Single Hung DISC-LA PRE 6/29/15
Ultimate Double/Single Hung Insert DISC-LA PRE 8/27/18

NOTE: Reference the End Plate Assembly chart to pair the correct replacement assembly with size of window.

ILLUSTRATION	DESCRIPTION	ILLUSTRATION	DESCRIPTION
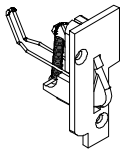 LH Shown	**A. Ultimate Tilt Latch End Plate Assembly – Beige** *Includes fasteners: 2 – #6x5/8" Phillips flathead wood screws* LH 10500571 RH 10500570	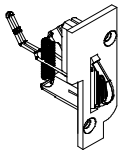 RH Shown	**B. Ultimate Tilt Latch End Plate Assembly – Black Over Mold** *Includes fasteners: 1 – #6x1 1/2" Phillips flathead screw Beige 11806136 1 – #6x5/8" Phillips flathead screw 11800519* LH 10500950 RH 10500951

End Plate Assembly Chart

CN		16	20	24	26	28	30	32	36	40
	Ultimate Frame Size	21 3/8	25 3/8	29 3/8	31 3/8	33 3/8	35 3/8	37 3/8	41 3/8	45 3/8
12	32 3/8	A	A	A	A	A	A	A	A	A
14	36 3/8	A	A	A	A	A	A	A	A	A
16	40 3/8	A	A	A	A	A	A	A	A	A
18	44 3/8	A	A	A	A	A	A	A	A	A
20	48 3/8	A	A	A	A	A	A	A	A	A
22	52 3/8	A	A	A	A	A	A	A	A	A
24	56 3/8	A	A	A	A	A	A	A	A	A
26	60 3/8	A	A	A	A	A	A	A	A	A
28	64 3/8	A	A	A	A	A	A	B	B	B
30	68 3/8	A	A	A	A	A	A	B	B	B
32	72 3/8	A	A	A	A	A	A	B	B	B
34	76 3/8	A	A	A	A	A	A	B	B	B
36	80 3/8	A	A	A	A	A	A	B	B	B
–	84 3/8	B	B	B	B	B	B	B	B	
40	88 3/8	B	B	B	B	B	B	B	B	
42	92 3/8	B	B	B	B	B	B	B	B	
–	96 3/8	B	B	B	B	B	B	B	B	

Ultimate Double/Single Hung DISC-LA PRE 6/29/15
Ultimate Double/Single Hung Insert DISC-LA PRE 8/27/18

ILLUSTRATION *NOT TO SCALE*	DESCRIPTION	COLOR	PART NO.
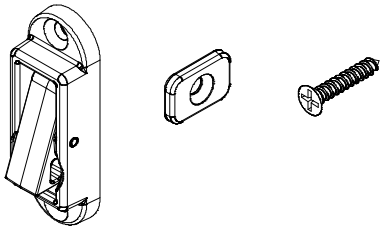	**Window Opening Control Device Kit** Also used for Insert *Includes:* *2 – Control Devices* *2 – Strike Plates* *6 – Color Match Screws, #7 x 7/8″*	White Bronze Brass Satin Chrome Polished Chrome Antique Brass Satin Taupe Oil Rubbed Bronze Satin Nickel	11850640 11850641 11850642 11850643 11850644 11850645 11850646 11850647 11850648
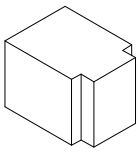 Foam Plug 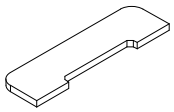 Jamb Gasket 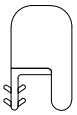 Sash Stop 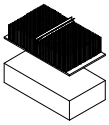 Check Rail Plug 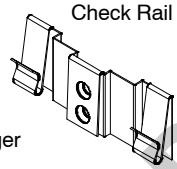 Balance Tube Hanger	**Replacement Jamb Carrier Package** *Includes:* *2 – Foam Plug, Interior Jamb Carrier Track (10500504)** *2 – Foam Gasket Jamb Carrier(10500510)** *2 – Sash Stop V784 (used on bottom sash) (10500524 Beige, 10500523 White)* *2 – Check rail plug & Pile weather strip (10500508 Beige, 10500509 White)* *2 – Balance Tube Hanger (11860044)* *2 – #7 x 7/8″ A–17 FH screws (11800727)* *1 – Instruction* *Foam Plug available in white only. Foam Gasket available in beige only.	Beige White	11850125 11850124

Ultimate Double/Single Hung DISC-LA PRE 8/27/15
Ultimate Double/Single Hung Insert DISC-LA PRE 8/27/18

ILLUSTRATION *NOT TO SCALE*	DESCRIPTION	COLOR	PART NO.
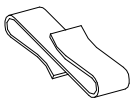	**Balance Tube S–Hook, Short, 1/4″ (6) Wide**		11870710
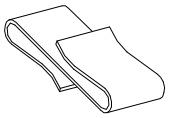	**Balance Tube S–Hook Heavy Duty, Short, 3/8″ (10) Wide**		11870711
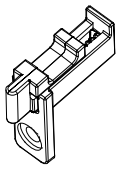	**Top Sash Tilt Latch Assembly** *NOTE: Usage dates: May, 7, 2005 – present* *Includes:* *1 – Tilt latch assembly* *1 – #7x1 1/4″ Phillips panhead wood screws, 11807141*	Beige	10500561
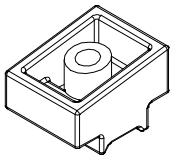	**Sill End Plug** *Includes:* *1 – Sill End Plug* *1 – #8 x 1 1/2″ flat head stainless steel screw, 11881129*		10500536
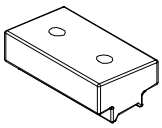	**Mulling Plug** *Includes:* *1 – Mulling Plug* *2 – #8 x 1 1/2″ flat head stainless steel screw, 11881129*		10500537
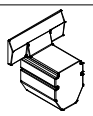	**Chimney Block** For EU Products only	White Beige	10500331 10500330

Ultimate Double/Single Hung DISC-LA PRE 6/29/15
Ultimate Double/Single Hung Insert DISC-LA PRE 8/27/18

HARDWARE PARTS – INSERT

ILLUSTRATION *NOT TO SCALE*	DESCRIPTION	COLOR	PART NO.
	3/8″ Flat Head Plug – Insert Units, Interior Operator	See Miscellaneous Mouldings and Extrusions chapter for available part numbers.	
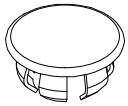	**Jamb Hole Plug – Insert Units** **Painted Brass** *Type is dependent upon exterior finish*	Wineberry Hampton Sage Cascade Blue Cadet Gray Coconut Cream Bright Silver Liberty Bronze Clay Suede Gunmetal	11882870 11882890 11882888 11882886 11882884 11882880 11882860 11882866 11882864 11882862
	Jamb Hole Plug – Insert Units *Type is dependent upon exterior finish*	Stone White Bronze Pebble Bahama Brown/Copper Evergreen Black (Ebony) Cashmere Sierra	11882868 11882668 11882568 11882468 11882768 11882168 11882269 356868

Ultimate Double/Single Hung DISC-LA PRE 6/29/15
Ultimate Double/Single Hung Insert DISC-LA PRE 8/27/18

BALANCE TUBES FOR FULL FRAME UNITS MANUFACTURED AFTER 12/15/98

Balance tubes for standard units may be ordered by part number. To determine the part number, locate the ID code from the existing tube (see illustration below) and use the chart on the next page.

Balance tubes for special sized units or insert units are not available by part number.

When ordering balance tubes for special sized units, please provide **ALL** the following information:

1. Provide the original order number when possible
2. Provide glass height or tube assembly overall.
3. Provide balance ID code. The ID code is imprinted on the tube (see illustration).
   NOTE: If the balance is oversized, a balance ID will not be available. In this case, provide the glass width, height, and makeup.
4. Specify top or bottom sash.
   NOTE: The balance for the top sash is in the exterior track and has a mill finish color. The balance for the bottom sash is in the interior track and has a beige or white color.
5. If the tube is for the bottom sash, specify color (Beige or White).
6. Specify quantity. Do **NOT** specify as pairs or sets. If one tube is needed, specify:quantity 1. If four tubes are needed, specify:quantity 4.

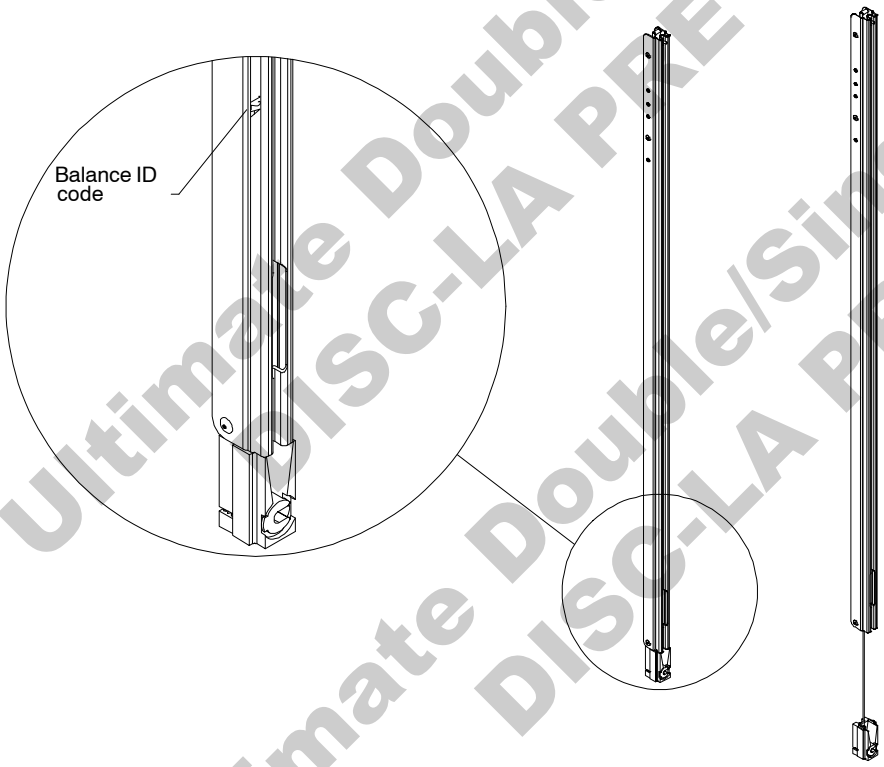

Ultimate Double/Single Hung DISC-LA PRE 6/29/15
Ultimate Double/Single Hung Insert DISC-LA PRE 8/27/18

Part numbers listed below are for one balance only. Each sash requires two balances.

Mill Balance Tube Part Numbers for the Top Sash

Spring Weight AA		Spring Weight A		Spring Weight B		Spring Weight C		Spring Weight D		Spring Weight E		Spring Weight F	
CN	Part #	CN	Part #	CN	Part #	CN	Part #	CN	Part #	CN	Part #	CN	Part #
12	10696612	12	10695012	12	10695112	12	10695212	12	10695312	–	–	–	–
14	10696614	14	10695014	14	10695114	14	10695214	14	10695314	14	10695414	–	–
16	10696616	16	10695016	16	10695116	16	10695216	16	10695316	16	10695416	–	–
18	10696618	18	10695018	18	10695118	18	10695218	18	10695318	18	10695418	–	–
20	10696620	20	10695020	20	10695120	20	10695220	20	10695320	20	10695420	–	–
22	10696622	22	10695022	22	10695122	22	10695222	22	10695322	22	10695422	22	10695522
24	10696624	24	10695024	24	10695124	24	10695224	24	10695324	24	10695424	24	10695524
26	10696626	26	10695026	26	10695126	26	10695226	26	10695326	26	10695426	26	10695526
28	10696628	28	10695028	28	10695128	28	10695228	28	10695328	28	10695428	28	10695528
30	10696630	30	10695030	30	10695130	30	10695230	30	10695330	30	10695430	30	10695530
32	10696632	32	10695032	32	10695132	32	10695232	32	10695332	32	10695432	32	10695532
34	10696634	34	10695034	34	10695134	34	10695234	34	10695334	34	10695434	34	10695534
36	10696636	36	10695036	36	10695136	36	10695236	36	10695336	36	10695436	36	10695536

Beige Balance Tube Part Numbers for the Bottom Sash

Spring Weight AA		Spring Weight A		Spring Weight B		Spring Weight C		Spring Weight D		Spring Weight E		Spring Weight F	
CN	Part #	CN	Part #	CN	Part #	CN	Part #	CN	Part #	CN	Part #	CN	Part #
12	10696712	12	10696012	12	10696112	12	10696212	12	10696312	–	–	–	–
14	10696714	14	10696014	14	10696114	14	10696214	14	10696314	14	10696414	–	–
16	10696716	16	10696016	16	10696116	16	10696216	16	10696316	16	10696416	–	–
18	10696718	18	10696018	18	10696118	18	10696218	18	10696318	18	10696418	–	–
20	10696720	20	10696020	20	10696120	20	10696220	20	10696320	20	10696420	–	–
22	10696722	22	10696022	22	10696122	22	10696222	22	10696322	22	10696422	22	10696522
24	10696724	24	10696024	24	10696124	24	10696224	24	10696324	24	10696424	24	10696524
26	10696726	26	10696026	26	10696126	26	10696226	26	10696326	26	10696426	26	10696526
28	10696728	28	10696028	28	10696128	28	10696228	28	10696328	28	10696428	28	10696528
30	10696730	30	10696030	30	10696130	30	10696230	30	10696330	30	10696430	30	10696530
32	10696732	32	10696032	32	10696132	32	10696232	32	10696332	32	10696432	32	10696532
34	10696734	34	10696034	34	10696134	34	10696234	34	10696334	34	10696434	34	10696534
36	10696736	36	10696036	36	10696136	36	10696236	36	10696336	36	10696436	36	10696536

White Balance Tube Part Numbers for the Bottom Sash

Spring Weight AA		Spring Weight A		Spring Weight B		Spring Weight C		Spring Weight D		Spring Weight E		Spring Weight F	
CN	Part #	CN	Part #	CN	Part #	CN	Part #	CN	Part #	CN	Part #	CN	Part #
12	10686712	12	10686012	12	10686112	12	10686212	12	10686312	–	–	–	–
14	10686714	14	10686014	14	10686114	14	10686214	14	10686314	14	10686414	–	–
16	10686716	16	10686016	16	10686116	16	10686216	16	10686316	16	10686416	–	–
18	10686718	18	10686018	18	10686118	18	10686218	18	10686318	18	10686418	–	–
20	10686720	20	10686020	20	10686120	20	10686220	20	10686320	20	10686420	–	–
22	10686722	22	10686022	22	10686122	22	10686222	22	10686322	22	10686422	22	10686522
24	10686724	24	10686024	24	10686124	24	10686224	24	10686324	24	10686424	24	10686524
26	10686726	26	10686026	26	10686126	26	10686226	26	10686326	26	10686426	26	10686526
28	10686728	28	10686028	28	10686128	28	10686228	28	10686328	28	10686428	28	10686528
30	10686730	30	10686030	30	10686130	30	10686230	30	10686330	30	10686430	30	10686530
32	10686732	32	10686032	32	10686132	32	10686232	32	10686332	32	10686432	32	10686532
34	10686734	34	10686034	34	10686134	34	10686234	34	10686334	34	10686434	34	10686534
36	10686736	36	10686036	36	10686136	36	10686236	36	10686336	36	10686436	36	10686536

Ultimate Double Hung DISC LA PRE 6/29/15
Ultimate Double/Single Hung Insert DISC LA PRE 6/27/18

JAMB CARRIERS FOR UNITS MANUFACTURED AFTER 12/15/98

Replacement jamb carriers include a pair of vinyl jamb carriers, jamb weather strip, foam plugs, top gaskets, pile weather strip and sash stops.

Jamb carriers for standard units may be ordered by part number from the chart below.

When ordering jamb carriers for special sized units, please provide the following information:

1. Provide original order number, when available.
2. Provide length (see Dimension A as shown)
3. Provide color (Beige or White).
4. If unequal glass heights, provide both glass heights.

NOTE: Jamb carriers must be ordered in pairs.

Ultimate Double/Single Hung DISC-LA PRE 6/29/15
Ultimate Double/Single Hung Insert DISC LA PRE 8/27/18

Glass Height (one sash)	Beige Part Number	White Part Number
12″ pair 14″ pair	10697012 10697014	10696912 10696914
16″ pair 18″ pair	10697016 10697018	10696916 10696918
20″ pair 22″ pair	10697020 10697022	10696920 10696922
24″ pair 24/36″ pair	10697024 10697060	10696924 10696960
26″ pair 28″ pair	10697026 10697028	10696926 10696928
30″ pair 32″ pair	10697030 10697032	10696930 10696932
34″ pair 36″ pair	10697034 10697036	10696934 10696936

JAMB CARRIER HARDWARE ASSEMBLIES

FOR FULL FRAME UNITS MANUFACTURED AFTER 12/15/98

NOTE: Balance tube hangers replaced S–hooks in February, 2008.

Replacement Jamb Carrier Hardware Assemblies Complete include a pair of vinyl jamb carriers, jamb weather strip, pile weather strip, foam plugs, top gaskets, sash stops, balance tube hangers and balance tubes.

Assemblies for standard units may be ordered by part number from the chart on the next page. .

NOTE: Jamb carrier hardware assemblies must be ordered in pairs.

When ordering jamb carrier hardware assemblies complete for special units, include the following information:

1. Original order number, if available
2. Provide length (see dimension A as shown) or rough opening height.
3. If unequal glass heights, provide both heights.
4. Provide balance ID code (s)*. The ID code is imprinted on the tube (see illustration)
5. Provide jamb carrier hardware color (Beige or White)

* If the balances are over sized, a balance ID will not be available. In this case, provide the glass width, height and makeup

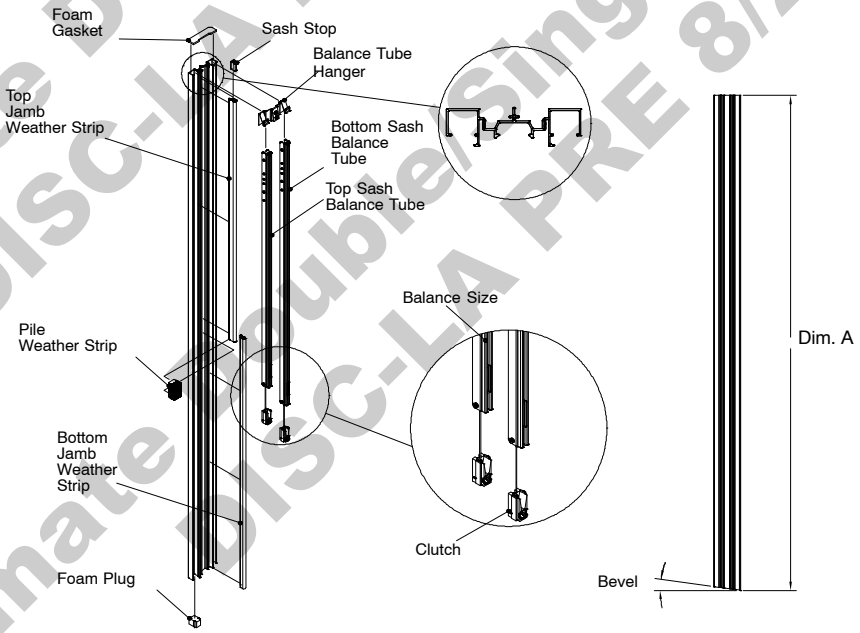

Ultimate Double/Single Hung DISC-LA PRE 6/29/15
Ultimate Double/Single Hung Insert DISC-LA PRE 8/27/18

JAMB CARRIER HARDWARE ASSEMBLIES

Ultimate Double Hung Jamb Carrier Hardware Assemblies						
CN Height	**Spring Weight A**	**Spring Weight B**	**Spring Weight C**	**Spring Weight D**	**Spring Weight E**	**Spring Weight F**
12 pair Beige	10535012	10535112	10535212	10535312		
14 pair Beige	10535014	10535114	10535214	10535314	10535414	
16 pair Beige	10535016	10535116	10535216	10535316	10535416	
18 pair Beige	10535018	10535118	10535218	10535318	10535418	
20 pair Beige	10535020	10535120	10535220	10535320	10535420	
22 pair Beige	10535022	10535122	10535222	10535322	10535422	10535522
24 pair Beige	10535024	10535124	10535224	10535324	10535424	10535524
24/36 pair Beige	10535060	10535160	10535260	10535360	10535460	10535560
26 pair Beige	10535026	10535126	10535226	10535326	10535426	10535526
28 pair Beige	10535028	10535128	10535228	10535328	10535428	10535528
30 pair Beige	10535030	10535130	10535230	10535330	10535430	10535530
32 pair Beige	10535032	10535132	10535232	10535332	10535432	10535532
34 pair Beige	10535034	10535134	10535234	10535334	10535434	10535534
36 pair Beige	10535036	10535136	10535236	10535336	10535436	10535536
12 pair White	10534012	10534112	10534212	10534312		
14 pair White	10534014	10534114	10534214	10534314	10534414	
16 pair White	10534016	10534116	10534216	10534316	10534416	
18 pair White	10534018	10534118	10534218	10534318	10534418	
20 pair White	10534020	10534120	10534220	10534320	10534420	
22 pair White	10534022	10534122	10534222	10534322	10534422	10534522
24 pair White	10534024	10534124	10534224	10534324	10534424	10534524
24/36 pair White	10534060	10534160	10534260	10534360	10534460	10534560
26 pair White	10534026	10534126	10534226	10534326	10534426	10534526
28 pair White	10534028	10534128	10534228	10534328	10534428	10534528
30 pair White	10534030	10534130	10534230	10534330	10534430	10534530
32 pair White	10534032	10534132	10534232	10534332	10534432	10534532
34 pair White	10534034	10534134	10534234	10534334	10534434	10534534
36 pair White	10534036	10534136	10534236	10534336	10534436	10534536

Ultimate Double Hung DISC-LA PRE 6/29/15
Ultimate Double/Single Hung Insert DISC-LA PRE 8/27/15

BALANCES AND JAMB CARRIER HARDWARE

FOR INSERT UNITS

Balance Tubes or Jamb Carrier Hardware Assemblies for insert units are not available by part number.

To order replacement balances specify:

1. Original order number.
2. Balance tube length
3. Balance ID code; information is imprinted on tube, (see illustration A below).
4. Top or bottom sash. Balance in *exterior* track has a mill finish tube for top sash, balance in *interior* track has a beige color tube for bottom sash.

To order replacement Jamb Carrier Hardware Assemblies specify:

1. Original order number.
2. Length(dimension A from illustration B)
3. Glass height and width of one sash (daylight opening + 1 1/16”). Measure both sash if they are not of equal size.
4. Tube ID stamp for top and bottom sash balance spring weights. (see illustration B for location of ID.)

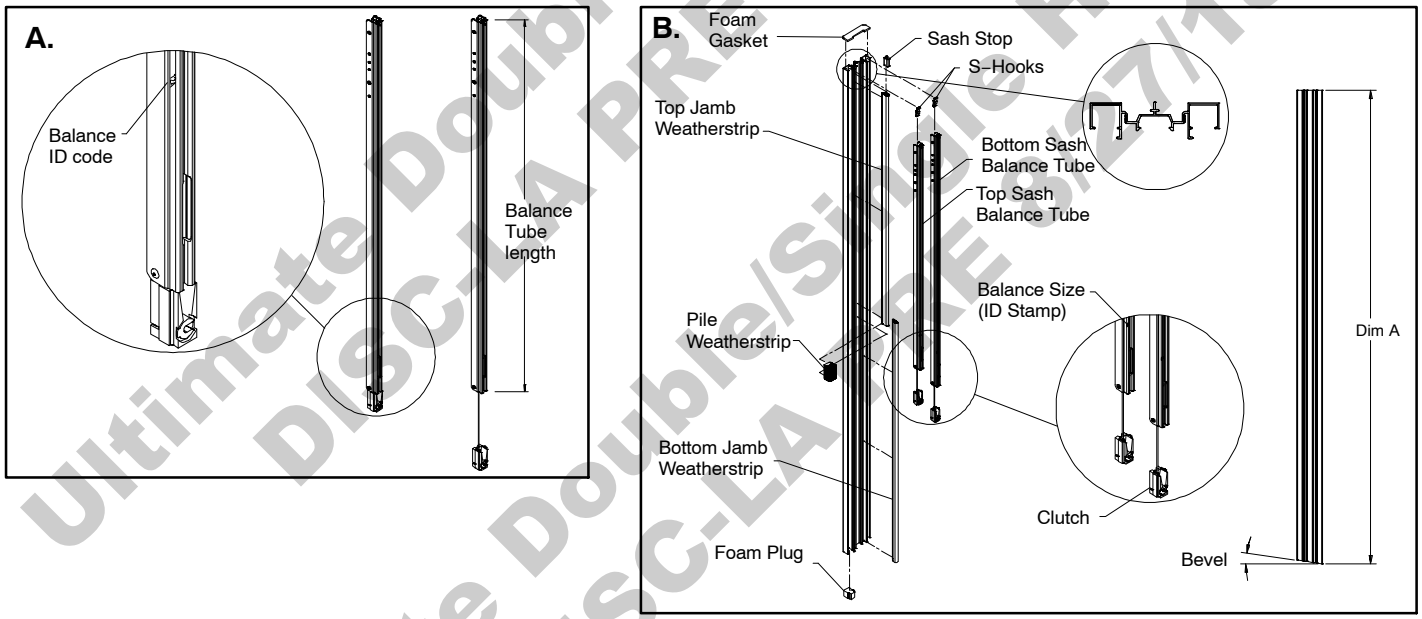

Ultimate Double/Single Hung DISC-LA PRE 6/29/15
Ultimate Double/Single Hung Insert DISC-LA PRE 8/27/18

REPLACEMENT WOOD PARTS – ULTIMATE DOUBLE HUNG/SINGLE HUNG DISC LA PRE 6/29/15

Wood Jamb Filler Operator – longest length available is 60″	W2018
Head Jamb Parting Stop– longest length available is 60″	W2530
Jamb Filler – Transom	W8080
Stool Field Applied	W7051
Jamb Liner	W2533
Sill Liner	W2531
Sill Liner – Transom/Picture	W8657
Sill Filler – Transom	W8591
Jamb Block Picture Unit	W2023
Interior Sash Stop – Transom	W2021
Interior Side Sash Stop – Picture/Transom	W3111

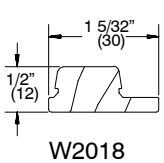

W2018

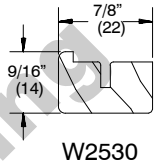

W2530

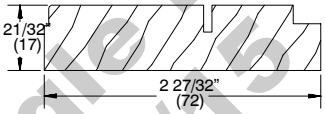

W8080

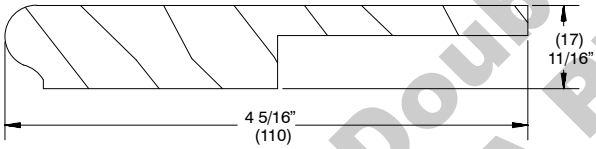

W7051

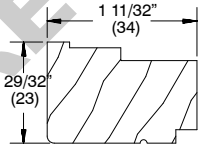

W2533

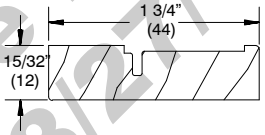

W2531

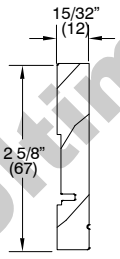

W8657

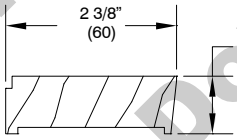

W8591

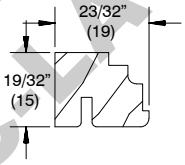

W2023

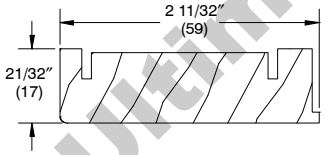

W2021 – Interior
Sash Stop – Transom Units

Ultimate Double/Single Hung DISC-LA PRE 6/29/15
Ultimate Double/Single Hung Insert DISC-LA PRE 8/27/18

ULTIMATE DOUBLE HUNG/SINGLE HUNG INSERT DISC LA PRE 8/27/18

Wood Jamb Filler Operator – longest length available is 60″	W2018
Head Jamb Parting Stop– longest length available is 60″	W2530
Jamb Filler – Transom	W8080

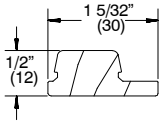

W2018

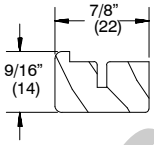

W2530

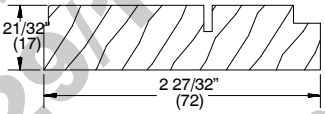

W8080

Ultimate Double/Single Hung DISC-LA PRE 6/2015
Ultimate Double/Single Hung Insert DISC-LA PRE 8/27/18

REPLACEMENT ALUMINUM

When ordering replacement parts specify:

1. Original order number
2. profile number;
3. call number or rough opening;
4. length;
5. handing (if applicable)
6. color.

Aluminum	Ultimate	Ultimate Insert
Jamb Filler Operator	A197	A197
Jamb Liner – Single Hung	A216	A216
Exterior Stop – Picture (Header and Jamb)		A1006
Clad Filler – Picture (Header and Jamb)	A199	

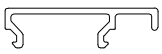

A197

A216

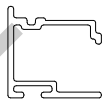

A1006

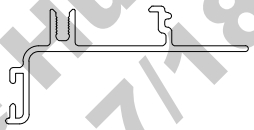

A199

Ultimate Double/Single Hung DISC-LA PRE 6/29/15

Ultimate Double/Single Hung Insert DISC-LA PRE 8/27/18

REPLACEMENT VINYL

When ordering replacement parts specify:

1. Original order number;
2. profile number or part number;
3. call number or rough opening;
4. length;
5. color.

ILLUSTRATION *NOT TO SCALE*	DESCRIPTION	COLOR	PART NO.
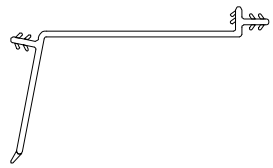	**Sill Cover** V931 100″ (2540) 100″ (2540) 120″ (3048) 120″ (3048)	 Beige White Beige White	 15350599 15351999 15350598 15350198
	Sash Retainer – Picture and Transom V130–100″ (2540)		15350099
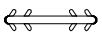	**Connecting Barb – Picture and Transom** V803 – specify length per lineal foot		15812999
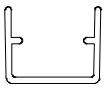	**Top Sash Stop** V1172, 8"	Beige Stone White	16211008 16210908

ILLUSTRATION	DESCRIPTION
Top Sash end cut 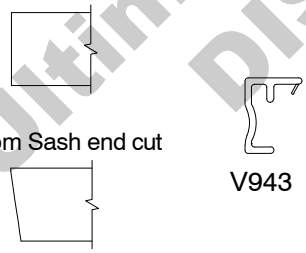 Bottom Sash end cut V943	**Contact Strip** V943
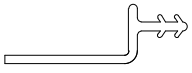 V1007	**Sill Fin For 8–14 degree sill bevel only**

ILLUSTRATION	DESCRIPTION
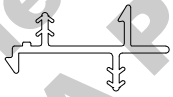 V946	**Clad Sash Connector**
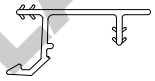 V929	**Clad Bottom Sash Check Rail Connector**

Ultimate Double/Single Hung DISC-LA PRE 6/29/15
Ultimate Double/Single Hung Insert DISC-LA PRE 8/27/18

When ordering replacement weather strip specify:

1. Original order number;
2. quantity;
3. part number;
4. description.

ILLUSTRATION *NOT TO SCALE*	DESCRIPTION	COLOR	PART NUMBER
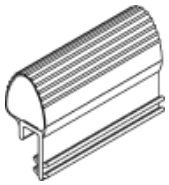	**Frame Weather Strip** V03291 100" (2540)	Beige White	15353205 15353210
	Frame Weather Strip V2838	No longer available, replace with V03291	
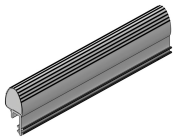	**Frame Weather Strip** V3179 100″ (2540)	No longer available, replace with V03291	
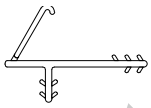	**Head Jamb Part Stop Weather Strip** V945 70″ (1778)	Beige	15352470
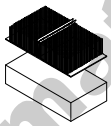	**Check Rail Plug & Pile Weatherstrip, Insert units** 3/4″ x 13/16″ x 1 1/2″	Beige White	10500508 10500509
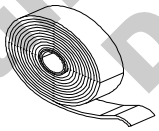	**Frame Weather Strip – Picture/Transom** MISC – 03692 25′ Roll	Gray	11406223
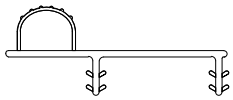	**Top Check Rail Weather Strip** V920 100″ (2540)	Beige	15350399
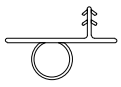	**Bottom Rail Weather Strip** V937 100″ (2540)	Beige	15350799
	Filler Weather Strip; Picture Unit V196 Specify Length	Black	No longer available.
	Alternate Weather Strip V147 NOTE: This is an alternate weather strip to replace V1297 that is no longer available.	Beige	15351699

Ultimate Double/Single Hung DISC-LA PRE 6/29/15
Ultimate Double/Single Hung Insert DISC-LA PRE 8/27/18

ULTIMATE DOUBLE HUNG AND SINGLE HUNG AND PICTURE OR TRANSOM SASH

NOTE: When ordering a replacement sash for Transom built prior to June 8, 2005, remove backer and order new parting stop.

When ordering replacement sash specify:

1. Original order number;
2. state Pre 3/04 unit for Picture or Transom sash replacement;
3. which sash is being replaced for double/single hung – top, bottom or pair;
4. Size;
   a. top or bottom (call number or OM of sash);
   b. pair (call number or sash opening – indicate if unequal sash height);
5. size (Picture or Transom)–(call number or OM of sash);
6. glazing;
7. Exterior color;
8. interior finish;
9. sticking (see illustration);
   a. ovolo
   b. square.

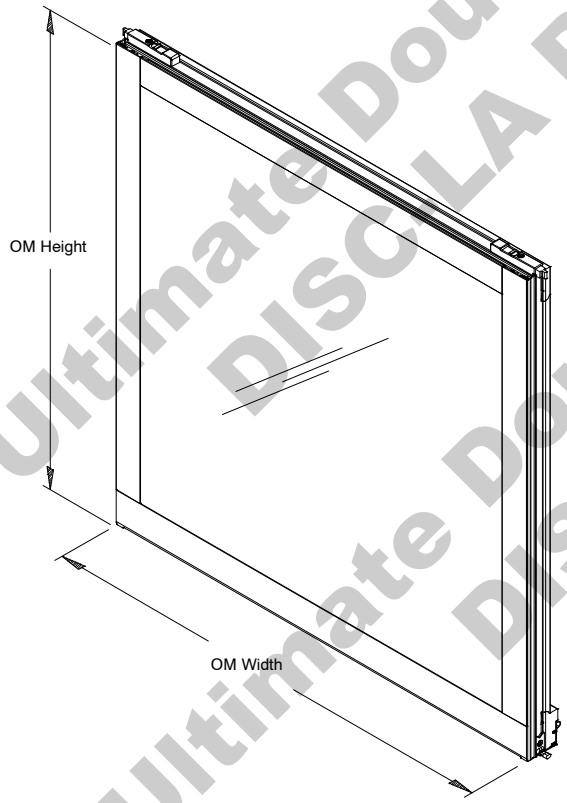

Exterior View
(top sash shown)

Sticking Profiles
Standard

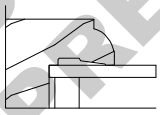
Ovolo

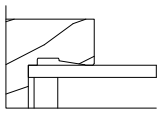
Square

Ultimate Double/Single Hung DISC LA PRE 6/29/15
Ultimate Double/Single Hung Insert DISC-LA PRE 827/18

SCREENS FOR ULTIMATE DOUBLE HUNG/SINGLE HUNG AND INSERT UNITS

Screens are available with aluminum or wood surround. Standard mesh is Marvin Bright View™. Aluminum mesh is available as an option in black, charcoal, bright aluminum, or bright bronze. Aluminum surrounds are available in Satin Taupe, Bronze, White, Brown and Pebble Gray. Screens feature a plunger type mounting system.

NOTE: The Aluminum Screen will be the standard for units with a frame size height of </=54 1/2”, with an option of the Extruded Aluminum Screen available. The standard screen for any unit with a frame size height >54 1/2” will be the Extruded Aluminum Screen.

Ultimate Double/Single Hung DISC-LA PRE 6/29/15
Ultimate Double/Single Hung Insert DISC-LA PRE 8/27/18

Aluminum Screens - Full and Half Screens

When ordering a replacement screen, specify:

1. size; − If there is no existing screen from which to obtain the OM of the screen, determine the size of the screen by using the conversions below. The daylight opening is the measurement of the visible glass.
2. color;
3. mesh type (if other than standard).

Aluminum Screen - Full Screens

NOTE: Ultimate Double Hung screens ordered 2/27/2012 and later contain weep bumps on the bottom rail. If the existing screen does not contain weep bumps, subtract 1/32″ from the height measurement.

Screen Sizes for Ultimate Double Hung Insert

Daylight Opening of one sash to OM of screen (if equal height)

Daylight Width + 4 13/32″(112) = OM Width of Screen
DLO + DLO +8 1/2″(216)= OM Height of Screen

Screen Sizes for Ultimate Double Hung manufactured after 12/15/98.

Daylight Opening of one sash (if equal height) to OM of screen.

Daylight Width + 4 3/8″ = OM Width of Screen
Daylight Height x 2 + 8 5/8″ = OM Height of Screen

WIDTH		HEIGHT	
SIZE	**OM−WIDTH**	**SIZE**	**OM−HEIGHT**
CN 16	19 5/16″	CN 12	30 1/2″
CN 20	23 5/16″	CN 14	34 1/2″
CN 24	27 5/16″	CN 16	38 1/2″
CN 26	29 5/16″	CN 18	42 1/2″
CN 28	31 5/16″	CN 20	46 1/2″
CN 30	33 5/16″	CN 22	50 1/2″
CN 32	35 5/16″	CN 24	54 1/2″
CN 36	39 5/16″	CN 24/36	66 1/2″
CN 40	43 5/16″	CN 26	58 1/2″
		CN 28	62 1/2″
		CN 30	66 1/2″
		CN 32	70 1/2″
		CN 34	74 1/2″
		CN 36	78 1/2″

Aluminum Screen - Half Screens
Ultimate Single Hung/Single Hung Insert

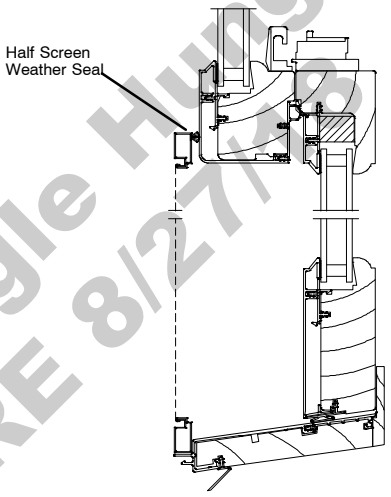

Ultimate Single Hung Manufactured after 12/15/98

Daylight Opening to OM of Half Screen

Daylight Width + 4 3/8″ = OM Width of Screen
Daylight Height + 5 1/16″ = OM Height of Screen

Ultimate Insert Single Hung Insert

Daylight Opening to OM of Half Screen

Daylight Width + 4 13/32″ = OM Width of Screen
Daylight Height + 5 1/16″ = OM Height of Screen

Ultimate Double/Single Hung DISC-LA PRE 6/29/15
Ultimate Double/Single Hung Insert DISC-LA PRE 8/27/18

Aluminum Screen Parts

When ordering replacement parts specify part number and quantity.

ILLUSTRATION *NOT TO SCALE*	DESCRIPTION	COLOR	PART NO.
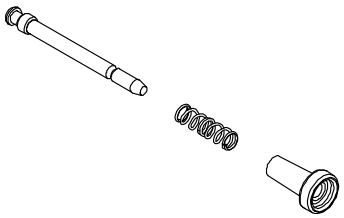	**Screen Plunger Kit** *Includes:* *1 - Plunger Bolt* *1 - Plunger Spring* *1 - Plunger Cap (Black)*		11851053
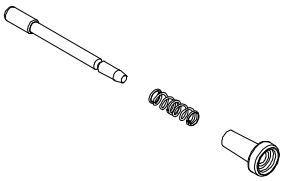	**Screen Plunger Kit – 3 PC** *Includes: 1 – Plunger Bolt* *1 – Plunger Spring* *1 – Plunger Cap (Black)*		No longer available
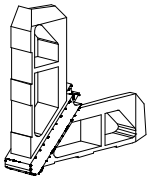	**Corner Key, Screen** MISC 051	Stone White Bronze Pebble Bahama Brown Clear Evergreen	No longer available
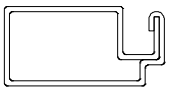	**Screen Surround, Aluminum Profile** A135 Available in 150″ (3810) length	Stone White Bronze Pebble Bahama Brown Evergreen	No longer available
	Screen Crossbar, Aluminum Profile A131 Available in 144″ (3658) length	Stone White Bronze Pebble Bahama Brown Evergreen	No longer available
	1/2 Screen Foam Liner Available in 84″ (2134) length	Black	10500028
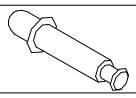	**Top Rail Screen Pin** M120	Clear	11867852
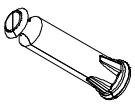	**Bottom Rail Weep Bump** Used on UDH 02/27/2012 to 6/29/15	Black	11861173

Ultimate Double/Single Hung DISC-LA PRE 6/29/15
Ultimate Double/Single Hung Insert DISC-LA PRE 8/27/18

Extruded Aluminum Screen - Full/Half Screens

When ordering a replacement screen, specify:

1. size; – Obtain the OM of the screen, from the exiting unit or determine the size of the screen by using the conversion charts below The daylight opening is the measurement of the visible glass.
2. surround color;
3. mesh type (if other than standard).

FULL AND HALF SCREEN CONVERSIONS FOR ULTIMATE MAGNUM AND IZ3 UNITS

Extruded Aluminum Screen

Full Screen for Full Frame

DLO of one sash (if equal height) to OM of screen.

DLO Width + 4 3/8″ = OM Width of Screen
DLO Height x 2 + 8 21/32″ = OM Height of Screen

Full Screen for Insert Units

DLO Width + 4 13/32″ = OM Width of Screen
DLO Height x 2 + 8 1/2″ = OM Height of Screen
IO Width − 2 11/32″ = OM Width of Screen
IO Height (Flat Bottom Fr)−1 5/8″ or
(8 and 14 degree)−1 1/16″= OM Height of Screen,

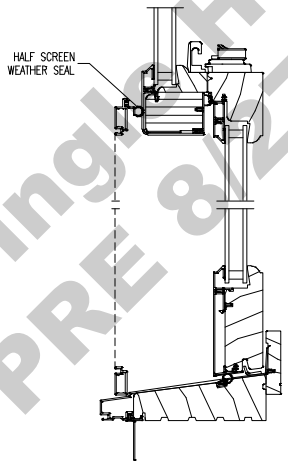

Extruded Aluminum Screen

Half Screen for Full Frame

Daylight Opening to OM of Half Screen

Daylight Width + 4 3/8″ = OM Width of Screen
Daylight Height + 5 5/16″ = OM Height of Screen

Ultimate Double/Single Hung DISC-LA PRE 6/29/15
Ultimate Double/Single Hung Insert DISC-LA PRE 8/27/18

Extruded Aluminum Screen Parts

When ordering replacement parts specify quantity and part number.

ILLUSTRATION *NOT TO SCALE*	DESCRIPTION	COLOR	PART NO.
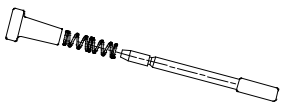	**Plunger and Spring Assembly** Used 2/2012 to present *Includes:* *1 – Plunger bolt (metal)* *1 – Plunger bolt cap (black)* *1 – Plunger bolt spring*	Black	10500706
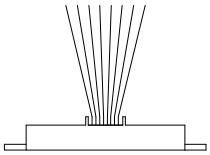	**Sash Pile Weather Strip** V2173 Specify lineal foot	Gray	15607501
	1/2 Screen Weather Strip V2113 Specify lineal foot	Beige	15361399
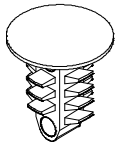	**Weep Bump**	Black	10500095

Ultimate Double/Single Hung DISC-LA PRE 6/29/15
Ultimate Double/Single Hung Insert DISC-LA PRE 8/27/18

ORDERING REPLACEMENT COMBINATIONS AND/OR INSERTS

Combination units are composed of two glass panels and a screen insert. One of the storm panels slides up for self storage when the screen is in use.

To order replacement combinations and/or inserts determine the outside measurement of the existing items or use the following conversions if none exists. Use the following charts based on daylight openings of the primary window sash to determine combination size and component sizes. Aluminum surround on combinations are available in Bronze, Stone White, Bahama Brown, Pebble Gray and Evergreen. Charcoal aluminum wire screen is standard. Fiberglass mesh screen is available as an option.

When ordering replacement combinations specify:

1. size; – If there is no existing combination to obtain the OM of the combination, use the conversion charts below. The daylight opening is the measurement of the double hung sash visible glass (provide measurements of both sash if unequal height).
2. color;
3. mesh type (if other than standard);
4. glass type.

Ultimate Double Hung units manufactured after 04/16/01

Daylight Opening to OM of Combination

Daylight Width + 4 1/2″ = OM Width of Combination

Daylight Height x 2+8 23/32″ = OM Height of Combination

Width

Call Number	Combination OM Width	Stationary Panel OM Width	Operator Panel OM Width	Screen OM Width
CN 16	19 7/16″	16 9/16″	16 9/16″	16 9/16″
CN 20	23 7/16″	20 9/16″	20 9/16″	20 9/16″
CN 24	27 7/16″	24 9/16″	24 9/16″	24 9/16″
CN 26	29 7/16″	26 9/16″	26 9/16″	26 9/16″
CN 28	31 7/16″	28 9/16″	28 9/16″	28 9/16″
CN 30	33 7/16″	30 9/16″	30 9/16″	30 9/16″
CN 32	35 7/16″	32 9/16″	32 9/16″	32 9/16″
CN 36	39 7/16″	36 9/16″	36 9/16″	36 9/16″
CN 40	43 7/16″	40 9/16″	40 9/16″	40 9/16″

Height

Call Number	Combination OM Height	Stationary Panel OM Height	Operator Panel OM Height	Screen OM Height
CN 12	30 19/32″	14 5/16″	13 15/32″	13 15/32″
CN 14	34 19/32″	16 5/16″	15 15/32″	15 15/32″
CN 16	38 19/32″	18 5/16″	17 15/32″	17 15/32″
CN 18	42 19/32″	20 5/16″	19 15/32″	19 15/32″
CN 20	46 19/32″	22 5/16″	21 15/32″	21 15/32″
CN 22	50 19/32″	24 5/16″	23 15/32″	23 15/32″
CN 24	54 19/32″	26 5/16″	25 15/32″	25 15/32″
CN 24/36	66 19/32″	26 5/16″	37 15/32″	37 15/32″
CN 26	58 19/32″	28 5/16″	27 15/32″	27 15/32″
CN 28	62 19/32″	30 5/16″	29 15/32″	29 15/32″
CN 30	66 19/32″	32 5/16″	31 15/32″	31 15/32″
CN 32	70 19/32″	34 5/16″	33 15/32″	33 15/32″
CN 34	74 19/32″	36 5/16″	35 15/32″	35 15/32″
CN 36	78 19/32″	38 5/16″	37 15/32″	37 15/32″

Ultimate Double/Single Hung DISC-LA PRE 6/29/15
Ultimate Double/Single Hung Insert DISC-LA PRE 8/27/18

ORDERING REPLACEMENT COMBINATIONS AND/OR INSERTS FOR PRE 4/2001 UNITS

Combination units are composed of two glass panels and a screen insert. One of the storm panels slides up for self storage when the screen is in use.

When ordering replacement combinations and/or inserts determine the outside measurement of the existing items or use the following conversions if none exists. Use the following charts based on daylight openings of the primary window sash to determine combination size and component sizes. Aluminum surround on combinations are available in Bronze, Bahama Brown, Pebble Gray and Evergreen. Charcoal aluminum wire screen is standard. Fiberglass mesh screen is available as an option.

When ordering replacement combinations specify:

1. size; – If there is no existing combination from which to obtain the OM of the combination, determine the size of the combination by using the conversion charts below. The daylight opening is the measurement of the sash visible glass (provide measurements of both sash if unequal height).
2. color;
3. mesh type (if other than standard);
4. glass type.

For Ultimate Double Hung products manufactured from 12/15/98 to 4/16/01

Daylight Opening to OM of Combination

Daylight Width + 4 1/4″ = OM Width of Combination

Daylight Height x 2+8 29/32″ = OM Height of Combination

Width				
Call Number	Combination OM Width	Stationary Panel OM Width	Operator Panel OM Width	Screen OM Width
CN 16	19 3/16″	15 29/32″	16 19/32″	15 29/32″
CN 20	23 3/16″	19 29/32″	20 19/32″	19 29/32″
CN 24	27 3/16″	23 29/32″	24 19/32″	23 29/32″
CN 26	29 3/16″	25 29/32″	26 19/32″	25 29/32″
CN 28	31 3/16″	27 29/32″	28 19/32″	27 29/32″
CN 30	33 3/16″	29 29/32″	30 19/32″	29 29/32″
CN 32	35 3/16″	31 29/32″	32 19/32″	31 29/32″
CN 36	39 3/16″	35 29/32″	36 19/32″	35 29/32″
CN 40	43 3/16″	39 29/32″	40 19/32″	39 29/32″

Height				
Call Number	Combination OM Height	Stationary Panel OM Height	Operator Panel OM Height	Screen OM Height
CN 12	30 19/32″	12 7/32″	12 29/32″	12 11/16″
CN 14	34 19/32″	14 7/32″	14 29/32″	14 11/16″
CN 16	38 19/32″	16 7/32″	16 29/32″	16 11/16″
CN 18	42 19/32″	18 7/32″	18 29/32″	18 11/16″
CN 20	46 19/32″	20 7/32″	20 29/32″	20 11/16″
CN 22	50 19/32″	22 7/32″	22 29/32″	22 11/16″
CN 24	54 19/32″	24 7/32″	24 29/32″	24 11/16″
CN 24/36	66 19/32″	24 7/32″	36 29/32″	36 11/16″
CN 26	58 19/32″	26 7/32″	26 29/32″	26 11/16″
CN 28	62 19/32″	28 7/32″	28 29/32″	28 11/16″
CN 30	66 19/32″	30 7/32″	30 29/32″	30 11/16″
CN 32	70 19/32″	32 7/32″	32 29/32″	32 11/16″
CN 34	74 19/32″	34 7/32″	34 29/32″	34 11/16″
CN 36	78 19/32″	36 7/32″	36 29/32″	36 11/16″

Ultimate Double/Single Hung DISC-LA PRE 6/29/15
Ultimate Double/Single Hung Insert DISC-LA PRE 3/21/18

COMBINATION PARTS

When ordering replacement parts specify:

1. part number;
2. quantity.

ILLUSTRATION *NOT TO SCALE*	DESCRIPTION	OPERATION COLOR	PART NO.
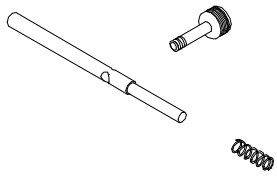	**Knob, Bolt and Spring Assembly** *Includes:* *2 – Aluminum knobs – 1/2″ length* *2 – Combination bolt and spring assemblies*		11900515
	Knurl Knob For bolt and spring assembly *Includes:* *2 – Knobs – 1/2″ length*	Aluminum Stainless Steel	11101705 03050111
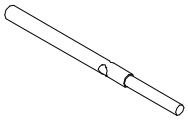	**Bolt** For bolt and spring assembly	Aluminum Stainless Steel	11101700 03050112
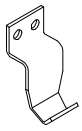	**Hook, Long** *Includes:* *1 – Hook* *2 – Rivets (01060758)*	Mill Finish	11040100
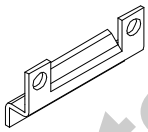	**Strike, Stationary Panel** M600 *Includes:* *1 – Strike* *2 – Rivets (01060758)*	Mill Finish	11040365
	Dual Seal Weather Strip, Center Rail V116 84″ (2134)	White	15828400
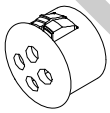	**Air Vent**	Black White	11867856 11867857
	Installation Screw *#8x3/4 Panhead*	Stone White Bahama Brown Pebble Bronze Evergreen	02058050 11800836 11800837 11800838 11800839

Ultimate Double/Single Hung DISC-LA PRE 6/29/15
Ultimate Double/Single Hung Insert DISC-LA PRE 8/27/18

COMBINATION PARTS PRE 4/2001 (LA)

Combination units are composed of two glass panels and a screen insert. One of the storm panels slides up for self storage when the screen is in use.

When ordering replacement parts specify:

1. part number;
2. quantity.

ILLUSTRATION *NOT TO SCALE*	DESCRIPTION	OPERATION-COLOR	PART NO.
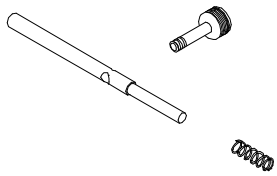	**Knob, Bolt and Spring Assembly** *Includes:* *2 – Aluminum knobs – 1/2″ length* *2 – Combination bolt and spring assemblies*	Mill Finish	11900521
	Knob, Aluminum For bolt and spring assembly *Includes:* *2 – Aluminum knobs – 1/2″ length*	Mill Finish	11101701
	Knob, Stainless Steel For bolt and spring assembly – 1/2″ length	Stainless Steel	03050113
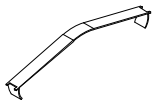	**Leaf Spring** M0104		11868835
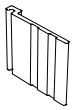	**Finger Pull** V254	Clear	No longer available
	Pan Head Screw #8x3/4″	Bronze White Brown Pebble Gray Evergreen	11800838 11800835 11800836 11800837 11800839

Ultimate Double/Single Hung DISC-LA PRE 6/29/15
Ultimate Double/Single Hung Insert DISC-LA PRE 8/27/18

COMBINATION PARTS PRE 4/2001 (LA)

When ordering replacement panel track specify (for units manufactured pre 4/2001):

1. profile;
2. call number or OM of combination;
3. color;
   a. V057 – black 15222200
   b. V057 – white 15222100
   c. V158 – white only 16186400
4. left, right, top or bottom or set.

V057
Operator Panel Track

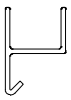

V158
Stationary Panel Track

Ultimate Double/Single Hung DISC-LA PRE 6/29/15
Ultimate Double/Single Hung Insert DISC-LA PRE 8/27/18

DISCONTINUED PARTS (NA)

ILLUSTRATION *NOT TO SCALE*	DESCRIPTION	COLOR	PART NO.
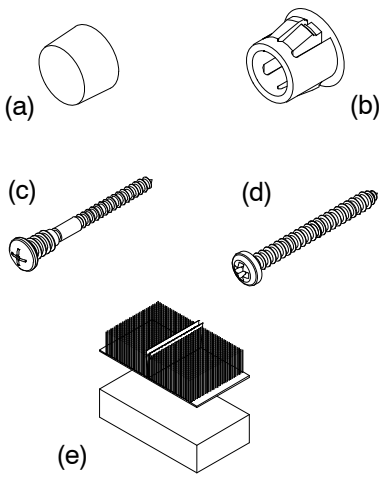	**Installation Pkgs for Operator Insert Units Only** *Includes:* 2 – 3/8″ Flathead plugs (interior) (a) 2 – Jamb Plugs (exterior) (b) 2 – 5/16″ #10 x 2 1/2″ jamb jack screws (c) 4 – #7 x 2″ Phillips panhead installation screws (d) 2 – Jamb liner check rail pads (e) **Transom** 4 – 3/8″ Flathead plugs (interior) (a) 4 – #7 x 2″ Phillips panhead installation screws (d) **Picture** 16 – #7 x 2″ Phillips panhead installation screws (d)		No longer available

Ultimate Double/Single Hung DISC-LA PRE 6/29/15
Ultimate Double/Single Hung Insert DISC-LA PRE 8/27/18

DISCONTINUED ALUMINUM PARTS (NA)

ILLUSTRATION *NOT TO SCALE*	DESCRIPTION	COLOR	PART NO.
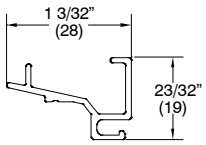	**Sill Riser – Insert Units Only** A2207 – 150″ (3810) NOTE: Also order accessory kerf weatherstrip – frame, and self tapping screw (11800498) *NOTE: For additional colors contact your Marvin Representative.*		No longer available
	Self Tapping Screw #8 x 5/8″ PH, PN, TX#2,410 Used with Riser Sill		No longer available

Ultimate Double/Single Hung DISC-LA PRE 6/29/15
Ultimate Double/Single Hung Insert DISC-LA PRE 8/27/18

ULTIMATE DOUBLE HUNG/SINGLE HUNG INSERT DISC LA PRE 8/27/18

PARTS NO LONGER AVAILABLE

Jamb Liner	W2185
Sill Liner	W2186
Sill Filler Transom	W8064
Sill Liner – Transom/Picture	W8065

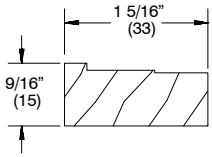

W2185

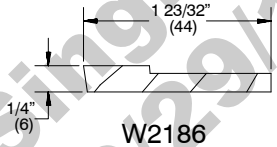

W2186

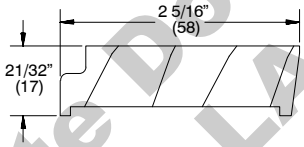

W8064

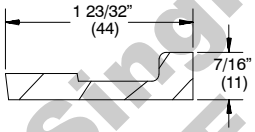

W8065

Ultimate Double/Single Hung DISC-LA PRE 6/29/15
Ultimate Double/Single Hung Insert DISC-LA PRE 8/27/18

DISCONTINUED WEATHER STRIP (NA)

ILLUSTRATION *NOT TO SCALE*	DESCRIPTION	COLOR	PART NUMBER
	Sill Thermal Break ***Ultimate Insert Units Only*** V030 150″ (3810)		No longer available
	Picture/Transom Top Rail & Stile Sash Weather Strip V1297 Specify Length	No longer available, use V147	

Ultimate Double/Single Hung DISC-LA PRE 6/29/15
Ultimate Double/Single Hung Insert DISC-LA PRE 8/27/18

DISCONTINUED MULLING/PANNING (NA)

MULLING AND PANNING KITS AND PARTS ARE NO LONGER AVAILABLE FOR THE ULTIMATE DOUBLE HUNG/SINGLE HUNG DISC LA PRE 6/29/15 AND THE ULTIMATE DOUBLE HUNG/SINGLE HUNG INSERT DISC LA PRE 8/27/18 PRODUCTS.

Ultimate Double/Single Hung DISC-LA PRE 6/29/15
Ultimate Double/Single Hung Insert DISC-LA PRE 8/27/18