WOOD DOUBLE HUNG TRANSOM ROUND TOP

RT1 TRUE HALF CIRCLE - IN SASH TRANSOM

RO (mm)	2-2 3⁄8 (670)	2-6 3⁄8 (772)	2-8 3⁄8 (822)	2-10 3⁄8 (873)	3-0 3⁄8 (924)	3-2 3⁄8 (975)
RO Rad. (mm)	1-1 3⁄16 (335)	1-3 3⁄16 (386)	1-4 3⁄16 (411)	1-5 3⁄16 (437)	1-6 3⁄16 (462)	1-7 3⁄16 (487)
RO (mm)	1-1 3⁄16 (335)	1-3 3⁄16 (386)	1-4 3⁄16 (411)	1-5 3⁄16 (437)	1-6 3⁄16 (462)	1-7 3⁄16 (487)
	UWDHTRRT2015	UWDHTRRT2417	UWDHTRRT2618	UWDHTRRT2819	UWDHTRRT3020	UWDHTRRT3221

RO (mm)	3-6 3⁄8 (1076)	3-10 3⁄8 (1178)	4-3 3⁄4 (1314)	4-11 3⁄4 (1518)	5-7 3⁄4 (1721)	6-3 3⁄4 (1924)
RO Rad. (mm)	1-9 3⁄16 (538)	1-11 3⁄16 (589)	2-1 7⁄8 (657)	2-5 7⁄8 (759)	2-9 7⁄8 (860)	3-1 7⁄8 (962)
RO (mm)	1-9 3⁄16 (538)	1-11 3⁄16 (589)	2-1 7⁄8 (657)	2-5 7⁄8 (759)	2-9 7⁄8 (860)	3-1 7⁄8 (962)
	UWDHTRRT3623	UWDHTRRT4025	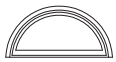 UWDHTRRT5027	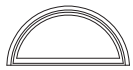 UWDHTRRT5831	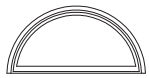 UWDHTRRT6635	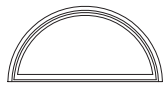 UWDHTRRT7439

CONSTRUCTION DETAILS

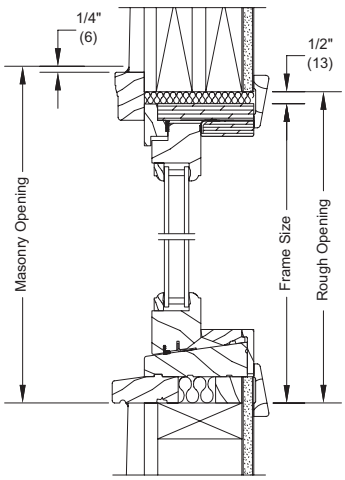

2" SASH HEAD JAMB AND SILL - TRANSOM

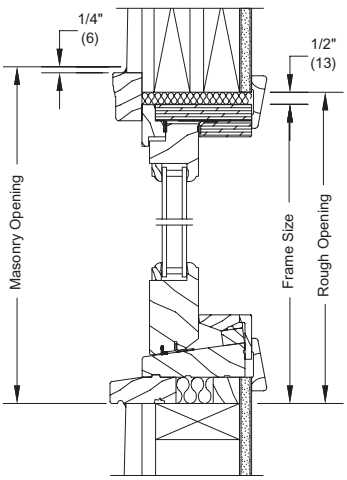

2" SASH HEAD JAMB AND SILL - PICTURE

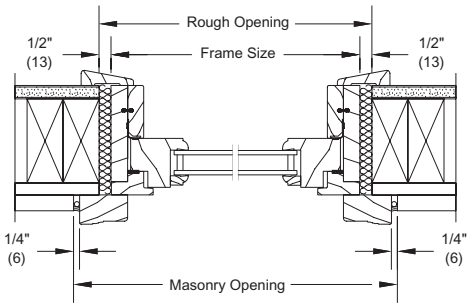

2" SASH JAMB - TRANSOM

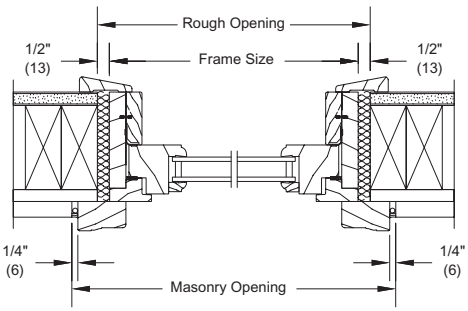

2" SASH JAMB - PICTURE

Details and Elevations not to scale.

- Elevations shown represent standard transoms without subsill. Add 15/16" (24) for direct glaze and 1 3/32" (28) for in sash to the rough opening height for standalone unit.
- Construction details without subsill not shown.

Please consult your local Marvin representative for more information.

For further details and drawings visit the 'Tools and Documents' section at Marvin.com.

Ultimate Wood Double Hung Transom Round Top: UWDHTRRT